Doc. No. F554-A55121 Rev.0

# HORIZONTAL END SUCTION VOLUTE PROCESS PUMP MODEL GSOF

ISO2858/5199

## TECHNICAL DATA BOOK 50/60Hz

**Model GSOF:**
**Front semi-open impeller type**

eDYNAMiQ

Eco, Dynamic and Integrated Quality

EBARA CORPORATION

March 2024

# Table of Contents




**SPECIFICATION**

| | |
|---|---|
| Main Applications | A-1 |
| Product Features | A-2 |
| General Description and Designation | A-3 |
| Design Details | A-4 |

**TECHNICAL DATA**

| | |
|---|---|
| Impeller Diameter | B-1 |
| Shaft No. and Shaft Diameter | B-2 |
| Maximum Allowable Pressure | B-3 |
| Interchangeability Chart | B-4 |
| The Number of Recommended Spare Parts | B-5 |
| Noise Data | B-6 |
| Lubricants Data | B-7 |

**DIMENSIONS**

| | |
|---|---|
| Dimensions of Bare Shaft Pump | C-1,2 |
| Dimensions of Pump with motor (Figure) | C-3 |
| Dimensions of Pump with motor (2P) | C-4, 5 |
| Dimensions of Pump with motor (4P) | C-6, 7 |

**CONSTRUCTION**

| | |
|---|---|
| Sectional View(Mechanical Seal Type) | D-1 |
| Sectional View(Gland Packing Type) | D-2 |
| Sectional View(Optional Mechanical Seal) | D-3 |
| Materials of Constructions | D-4, 5 |
| Selection of Shaft Seal | D-6 |

**SELECTION CHART**

| | |
|---|---|
| 50Hz – 2950 min-1 | E-1 |
| 50Hz – 1450 min-1 | E-2 |
| 60Hz – 3550 min-1 | E-3 |
| 60Hz – 1750 min-1 | E-4 |




EBARA reserves the right to make changes without prior notice.

## Table of Contents



### PERFORMANCE CURVES

**50Hz – 2950 min-1**

Model GSOF50-32-125, GSOF50-32-160, GSOF50-32-200, GSOF50-32-250
GSOF65-40-160, GSOF65-40-200, GSOF65-40-250
GSOF80-50-160, GSOF80-50-200, GSOF80-50-250
GSOF100-65-160, GSOF100-65-200, GSOF100-65-250

**50Hz – 1450 min-1**

Model GSOF50-32-125, GSOF50-32-160, GSOF50-32-200, GSOF50-32-250
GSOF65-40-160, GSOF65-40-200, GSOF65-40-250
GSOF80-50-160, GSOF80-50-200, GSOF80-50-250, GSOF80-50-315
GSOF100-65-160, GSOF100-65-200, GSOF100-65-250, GSOF100-65-315

**60Hz – 3550 min-1**

Model GSOF50-32-125, GSOF50-32-160, GSOF50-32-200, GSOF50-32-250
GSOF65-40-160, GSOF65-40-200, GSOF65-40-250
GSOF80-50-160, GSOF80-50-200, GSOF80-50-250
GSOF100-65-160, GSOF100-65-200, GSOF100-65-250

**60Hz – 1750 min-1**

Model GSOF50-32-125, GSOF50-32-160, GSOF50-32-200, GSOF50-32-250
GSOF65-40-160, GSOF65-40-200, GSOF65-40-250
GSOF80-50-160, GSOF80-50-200, GSOF80-50-250, GSOF80-50-315
GSOF100-65-160, GSOF100-65-200, GSOF100-65-250, GSOF100-65-315



EBARA reserves the right to make changes without prior notice.

## SPECIFICATION - Main Applications



### PETROCHEMICAL & CHEMICAL INDUSTRY

・Chemical feed pump (Organic chemicals, Acid, Alkali)【**GSO/GSOF**】
・Catalyst feed pump【**GSOF**】
・Slurry product feed pump (e.g. PVC slurry)【**GSOF**】

### INORGANIC CHEMICAL INDUSTRY

・Chemical feed pump (Acid, Alkali)【**GSO/GSOF**】
・Catalyst feed pump【**GSOF**】

### PHARMACEUTICAL INDUSTRY

・Chemical feed pump (Organic chemicals, Acid, Alkali)【**GSO/GSOF**】
・Purified water feed pump【**GSO/GSOF**】
・Slurry product feed pump (Crystalized products)【**GSOF**】
・Wastewater pump【**GSO/GSOF**】

### SEMICONDUCTOR INDUSTRY

・Pure water feed pump【**GSO/GSOF**】
・Wastewater pump【**GSOF**】

### STEEL INDUSTRY

・Rolling facility (Rinsed water, Scale pit slurry)【**GSO/GSOF**】
・Plating facility (Degreasing liquid, e.g. Alkali, Acid, Rinsed water)【**GSO/GSOF**】

### METAL GOODS INDUSTRY

・Plating facility (Degreasing liquid, e.g. Alkali, Acid, Rinsed water)【**GSO/GSOF**】

### WATER TREATMENT INDUSTRY

・RO water facility (e.g. Seawater, Filtered water)【**GSO/GSOF**】

### FOOD INDUSTRY

・Process liquid feed pump (e.g. Starch, Molasses, Wort, and miscellaneous liquid with viscosity range is up to 400cst)【**GSO/GSOF**】
・Cleaning in place pump【**GSO/GSOF**】
・Filtration medium feed pump【**GSO/GSOF**】



EBARA reserves the right to make changes without prior notice.

## SPECIFICATION - Main Applications



### PAPER AND PULP INDUSTRY

・Process liquid feed pump (Inorganic chemical)【**GSO/GSOF**】

・Pulp slurry feed pump (Pulp conc. is 0.3% and below)【**GSO/GSOF**】

### MOTOR VEHICLE INDUSTRY

・Machining line (Coolant)【**GSO/GSOF**】

・Painting line (Chemical conversion treatment, Electrodeposition paint)【**GSO/GSOF**】

### FISHERIES INDUSTRY

・Aquaculture (Seawater)【**GSO/GSOF**】



EBARA reserves the right to make changes without prior notice.

## SPECIFICATION - Product Features



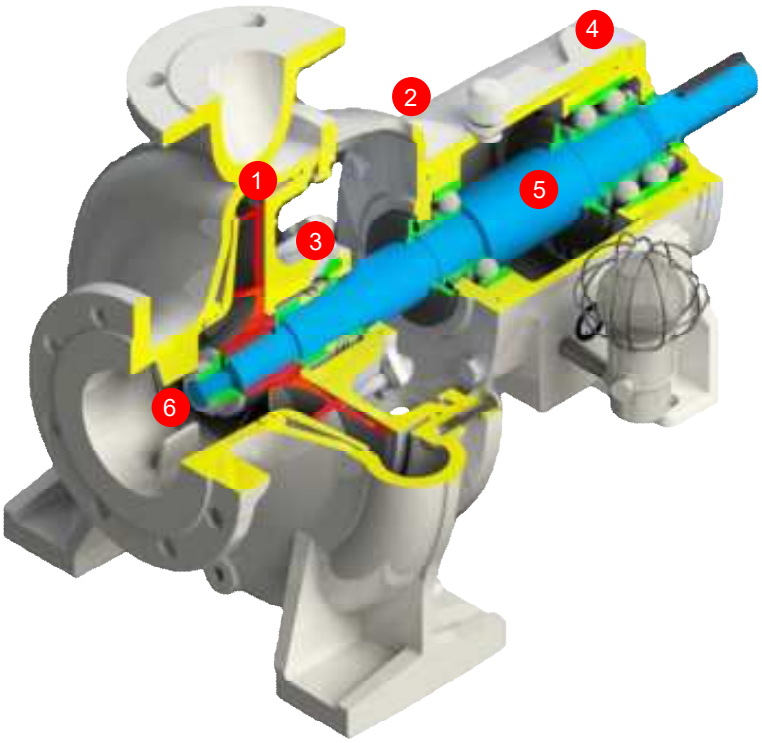


1 **Impeller with front semi-open shape**
- Front semi-open vanes are desinged for slurry that can handle with higher content of particle than the application of reverse open vane.

2 **Back pullout construction**
- Easy maintenance without disassembling suction and discharge piping

3 **Gland cover compatible with various shaft seal types**
- Sufficient seal box space enough to support shaft sealing requirements for special applications

4 **Heavy duty design of bearing and bearing housing construction**
- Low vibration value of 3.0 mm/s as per ISO 5199
- Longer bearing life as per ISO 5199

5 **Heavy duty shaft design**
- Deflection at shaft seal 50 µm or less
- Reduction of shaft sealing problems to make maintenance costs lower by small shaft deflection and vibration

6 **U-type impeller nut**
- Not loosen during operation
- Short assembly time
- Can be used repeatedly

7 **High interchangeability of parts**
- Minimized maintenance cost and stock parts
- Only 3 sizes of bearing housing frame
- Only 4 type of shaft

8 **International Standards**
- Pump dimension in accordance with ISO 2858 and EN 22858
- Pump design as per ISO 5199
- Seal chamber dimension in accordance with ISO 3069



EBARA reserves the right to make changes without prior notice.

## General Description

| | |
|---|---|
| Capacity | To 210 m3/hr (50Hz) |
| | To 250 m3/hr (60Hz) |
| Head | To 105 m (50Hz) |
| | To 150 m (60Hz) |
| Liquid temperature | -30℃ to 150℃ |
| Max. working pressure | Up to 16 bar (1.6MPa) |
| Material (*1) | Casing : 304 Stainless Steel<br>Impeller: 304 Stainless Steel |
| Standard | ISO2858, ISO5199 |
| Rotation | Clockwise viewed from coupling end |

(*1) 316 stainless steel can be selected as an option.

## Designation

The following designation is system according to ISO 2858.

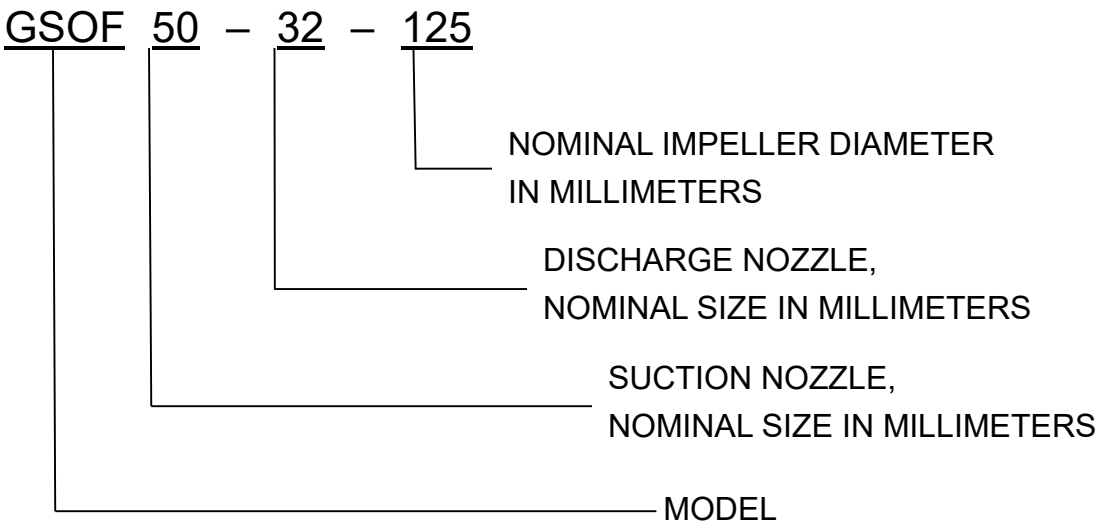



EBARA reserves the right to make changes without prior notice.

FEATURE

- Horizontal foot mounting
- Back pull-out design
- Single-stage
- Radially split volute casing

APPLICABLE FLANGE STANDARD

- EN PN16
- JIS 10K

IMPELLER TYPE

- Front semi-open impeller, single suction

SHAFT SEAL

- Single mechanical seal based upon DIN 24960
- Single mechanical seal (Cylindrical type)
- Double mechanical seal (Cylindrical type)
- Gland packing

BEARINGS AND LUBRICATION

- Standard : Heavy duty ball bearing (Oil lubrication)

PAINTING

**1. Outer Surface**

**・Standard for Casing and Gland Cover**

| | |
|---|---|
| Primer coating | Non painting |
| Final coating | Non painting |

**・Standard for Bearing Housing, Bearing Cover, Adapter, Bracket and Stay**

| | |
|---|---|
| Primer coating | Polyurethane resin primer |
| Final coating | Acrylic urethane resin paint |
| Finish color | Munsell 2.5PB4/2 (Dark gray) |

**2. Inner Surface**

**・Standard for Casing, Gland cover and Impeller**

| | |
|---|---|
| Primer coating | Non painting |
| Final coating | Non painting |

**・Standard for Bearing Housing**

| | |
|---|---|
| Primer coating | Polyurethane resin primer |
| Final coating | Non painting |


EBARA reserves the right to make changes without prior notice.

## TECHNICAL DATA – Impeller Diameter



— Not applicable Model Unit : mm

| Model | Shaft No. | 50Hz | | | | 60Hz | | | |
|---|---|---|---|---|---|---|---|---|---|
| | | 2P | | 4P | | 2P | | 4P | |
| | | Max | Min | Max | Min | Max | Min | Max | Min |
| 50-32-125 | 40 | 142 | 106 | 142 | 106 | 142 | 106 | 142 | 106 |
| 50-32-160 | 40 | 173 | 139 | 173 | 139 | 173 | 139 | 173 | 139 |
| 50-32-200 | 40 | 214 | 166 | 214 | 166 | 214 | 166 | 214 | 166 |
| 50-32-250 | 50A | 256 | 204 | 256 | 204 | 256 | 204 | 256 | 204 |
| 65-40-160 | 40 | 177 | 134 | 177 | 134 | 177 | 134 | 177 | 134 |
| 65-40-200 | 40 | 212 | 168 | 212 | 168 | 212 | 168 | 212 | 168 |
| 65-40-250 | 50A | 254 | 206 | 254 | 206 | 254 | 206 | 254 | 206 |
| 80-50-160 | 40 | 177 | 131 | 177 | 131 | 177 | 131 | 177 | 131 |
| 80-50-200 | 40 | 215 | 176 | 215 | 176 | 215 | 176 | 215 | 176 |
| 80-50-250 | 50A | 264 | 197 | 264 | 197 | 235 | 197 | 264 | 197 |
| 80-50-315 | 50B | - | - | 335 | 262 | - | - | 335 | 262 |
| 100-65-160 | 50A | 177 | 135 | 177 | 135 | 177 | 135 | 177 | 135 |
| 100-65-200 | 50A | 219 | 162 | 219 | 162 | 219 | 162 | 219 | 162 |
| 100-65-250 | 50B | 266 | 214 | 266 | 214 | 266 | 214 | 266 | 214 |
| 100-65-315 | 60 | - | - | 305 | 243 | - | - | 305 | 243 |



EBARA reserves the right to make changes without prior notice.

## TECHNICAL DATA – Shaft No. and Shaft Diameter



Unit : mm

| Model | Shaft No. | At Coupling | At Radial Bearing | At Thrust Bearing | Under Shaft Sleeve | Sleeve Dia. (For Gland packing) |
|---|---|---|---|---|---|---|
| 50-32-125 | 40 | 24 | 40 | 40 | 38 | 45 |
| 50-32-160 | 40 | 24 | 40 | 40 | 38 | 45 |
| 50-32-200 | 40 | 24 | 40 | 40 | 38 | 45 |
| 50-32-250 | 50A | 32 | 50 | 55 | 48 | 55 |
| 65-40-160 | 40 | 24 | 40 | 40 | 38 | 45 |
| 65-40-200 | 40 | 24 | 40 | 40 | 38 | 45 |
| 65-40-250 | 50A | 32 | 50 | 55 | 48 | 55 |
| 80-50-160 | 40 | 24 | 40 | 40 | 38 | 45 |
| 80-50-200 | 40 | 24 | 40 | 40 | 38 | 45 |
| 80-50-250 | 50A | 32 | 50 | 55 | 48 | 55 |
| 80-50-315 | 50B | 32 | 50 | 55 | 48 | 55 |
| 100-65-160 | 50A | 32 | 50 | 55 | 48 | 55 |
| 100-65-200 | 50A | 32 | 50 | 55 | 48 | 55 |
| 100-65-250 | 50B | 32 | 50 | 55 | 48 | 55 |
| 100-65-315 | 60 | 42 | 60 | 65 | 55 | 60 |



EBARA reserves the right to make changes without prior notice.

## 1. Maximum Allowable Working Pressure (MAWP)

| Pressure casing material | Liquid temperature | Max. allowable working pressure | Flange standard |
|---|---|---|---|
| Stainless Steel | -30℃ to 150℃ | 16 bar (1.6MPa) | EN PN16 |
| | | 14 bar (1.4MPa) | JIS 10K |

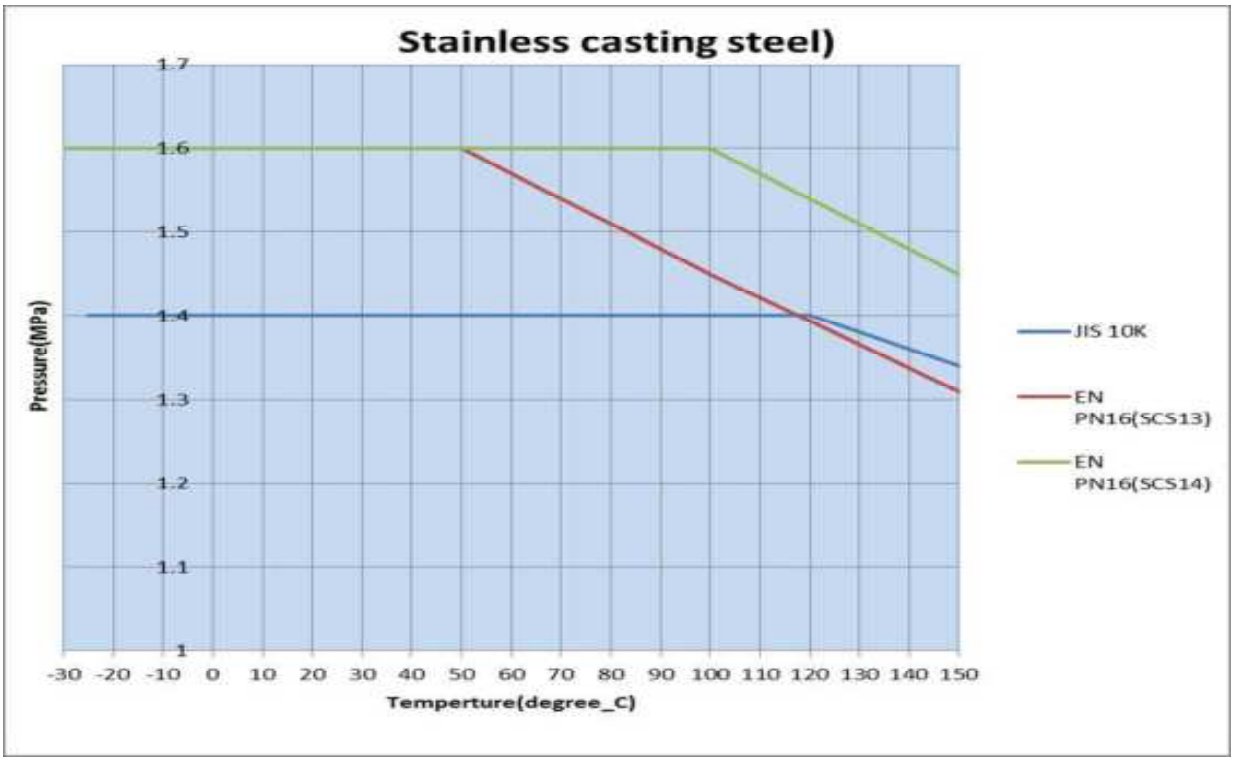


## 2. Maximum Allowable Suction Pressure (MASP)

(1) Mechanical Seal Application

Maximum Allowable Suction Pressure (MASP) must be smaller than the difference between the Maximum Allowable Working Pressure (MAWP) and Pump Shut-off Pressure (PSP), as follows. However, MASP shall not exceed 16 bar.

**MASP < MAWP — PSP**

[ PSP(in bar) = 0.098 x Pump Shut-off Head(in m) x Liquid Density(in kg/L) ]

(2) Gland Packing Application

Maximum Allowable Suction Pressure (MASP) of Gland Packing application is **6 bar** as standard.


EBARA reserves the right to make changes without prior notice.

## Oil Lubrication Bearing

| Model | Shaft No. | Impeller | Ball Bearing (M) | Ball Bearing (P) | Deflector | Oil Seal (M) | Oil Seal (P) | O-Ring (Gland Cover) | O-Ring BG Cover (M) | O-Ring BG Cover (P) | for Mechanical Seal: Mech.Seal | for Mechanical Seal: O-Ring (Gland Plate) | for Gland Packing: Packing Sleeve | for Gland Packing: Gasket (PK Sleeve) | for Gland Packing: Gland Packing |
|---|---|---|---|---|---|---|---|---|---|---|---|---|---|---|---|
| 50-32-125 | 40 | Depends on each model | L | M | A | A | B | A | B | A | A | A | A | A | A |
| 50-32-160 | 40 | | L | M | A | A | B | A | B | A | A | A | A | A | A |
| 50-32-200 | 40 | | L | M | A | A | B | B | B | A | A | A | A | A | A |
| 50-32-250 | 50A | | N | P | B | B | C | C | D | C | B | B | B | B | B |
| 65-40-160 | 40 | | L | M | A | A | B | A | B | A | A | A | A | A | A |
| 65-40-200 | 40 | | L | M | A | A | B | B | B | A | A | A | A | A | A |
| 65-40-250 | 50A | | N | P | B | B | C | C | D | C | B | B | B | B | B |
| 80-50-160 | 40 | | L | M | A | A | B | A | B | A | A | A | A | A | A |
| 80-50-200 | 40 | | L | M | A | A | B | B | B | A | A | A | A | A | A |
| 80-50-250 | 50A | | N | P | B | B | C | C | D | C | B | B | B | B | B |
| 80-50-315 | 50B | | N | P | B | B | C | D | D | C | B | B | C | B | B |
| 100-65-160 | 50A | | N | P | B | B | C | A | D | C | B | B | B | B | B |
| 100-65-200 | 50A | | N | P | B | B | C | B | D | C | B | B | B | B | B |
| 100-65-250 | 50B | | N | P | B | B | C | C | D | C | B | B | C | B | B |
| 100-65-315 | 60 | | Q | R | C | C | D | D | F | E | C | C | D | C | C |

Note: Materials of every parts should be specified by the section of "Materials of Construction".
The same letters in the same vertical column are interchangeable.

EBARA reserves the right to make changes without prior notice.

## The number of recommended spare parts

| Parts name | Used number of parts / unit | Spare parts for 1 year operation | | Spare parts for 2 years operation | | Remarks |
|---|---|---|---|---|---|---|
| | | 1 pump | 2 and more pumps (*1) | 1 pump | 2 and more pumps (*1) | |
| Impeller | 1 | - | - | 1 | 20% | |
| Shaft | 1 | - | - | 1 | 20% | |
| Ball bearing (M) | 1 set | 1 set | 25% | 1 set | 40% | |
| Ball bearing (P) | 1 | 1 | 25% | 1 | 40% | |
| Packing sleeve | 1 | 1 | 30% | 1 | 50% | *2 |
| Coupling consumable parts (if any) | 1 set | 1 set | 30% | 1 | 50% | |
| Mechanical seal | 1 set | 1 set | 40% | 1 set | 70% | *3 |
| Deflector | 1 | 1 | 40% | 1 | 70% | |
| Oil Flinger | 1 | 1 | 40% | 1 | 70% | |
| Oil seal (M) | 1 | 1 | 100% | 2 | 150% | |
| Oil seal (P) | 1 | 1 | 100% | 2 | 150% | |
| Gland packing | 1 set | 1 set | 100% | 2 sets | 150% | *2 |
| Gasket-PK sleeve | 1 | 1 | 100% | 2 | 150% | *2 |
| O-Rings | 1 | 1 | 100% | 2 | 150% | |

*1 It should be noted, the standby pump is also taken into consideration, and the fraction of the calculation result is rounded up.

Calculation example: 3 pumps x 70%, applicable parts = 210% ⇒ Recommend 300% spare parts

*2 for gland packing type

*3 for mechanical seal type


EBARA reserves the right to make changes without prior notice.

## Overall Sound Pressure Level

Unit : dB(A)

| Model | Shaft No. | 50Hz | | 60Hz | |
|---|---|---|---|---|---|
| | | 2950 mim$^{-1}$ (2 Pole) | 1450 mim$^{-1}$ (4 Pole) | 3550 mim$^{-1}$ (2 Pole) | 1750 mim$^{-1}$ (4 Pole) |
| 50-32-125 | 40 | 64 | 54 | 68 | 54 |
| 50-32-160 | 40 | 68 | 54 | 70 | 58 |
| 50-32-200 | 40 | 72 | 58 | 73 | 62 |
| 50-32-250 | 50A | 73 | 62 | 77 | 65 |
| 65-40-160 | 40 | 70 | 58 | 73 | 62 |
| 65-40-200 | 40 | 73 | 62 | 77 | 65 |
| 65-40-250 | 50A | 76 | 63 | 80 | 67 |
| 80-50-160 | 40 | 72 | 58 | 76 | 63 |
| 80-50-200 | 40 | 76 | 63 | 78 | 65 |
| 80-50-250 | 50A | 80 | 67 | 81 | 69 |
| 80-50-315 | 50B | — | 69 | — | 72 |
| 100-65-160 | 50A | 73 | 62 | 77 | 65 |
| 100-65-200 | 50A | 77 | 65 | 80 | 69 |
| 100-65-250 | 50B | 81 | 67 | 81 | 71 |
| 100-65-315 | 60 | — | 71 | — | 72 |

Note : The overall sound pressure level is the value measured 1m away from the pump unit and does not include driver noise.


EBARA reserves the right to make changes without prior notice.

## TECHNICAL DATA – Lubricants Data



The following lubricants are used to lubricate pump bearings with an oil lubricated structure.

| Recommended Lubricants Type | Manufacturer's Brand Name | | |
|---|---|---|---|
| | SHELL | EXXON MOBIL | |
| Turbine Oil ISO VG46 | TURBO OIL T46 | DTE MEDIUM | TERESSO 46 |
| Turbine Oil ISO VG68 (*1) | TURBO OIL T68 | DTE HEAVY MEDIUM | TERESSO 68 |

Note : (*1) Recommended for the installation at tropical area.

| Model | Shaft No. |
|---|---|
| 50-32-125 | 40 |
| 50-32-160 | 40 |
| 50-32-200 | 40 |
| 50-32-250 | 50A |
| 65-40-160 | 40 |
| 65-40-200 | 40 |
| 65-40-250 | 50A |
| 80-50-160 | 40 |
| 80-50-200 | 40 |
| 80-50-250 | 50A |
| 80-50-315 | 50B |
| 100-65-160 | 50A |
| 100-65-200 | 50A |
| 100-65-250 | 50B |
| 100-65-315 | 60 |

Bearing lubrication shall be changed at least per the following schedule.

| | Initial Charge | | On and after the Seacond Charge | |
|---|---|---|---|---|
| Shaft No. | Capacity (Liter) | Interval (Hours) | Capacity (Liter) | Interval (Hours) |
| 40 | 0.6 | 300 | 0.6 | 4000 |
| 50A, 50B | 1 | 300 | 1 | 4000 |
| 60 | 1.5 | 300 | 1.5 | 4000 |



EBARA reserves the right to make changes without prior notice.

## DIMENSIONS - Dimensions of Bare Shaft Pump



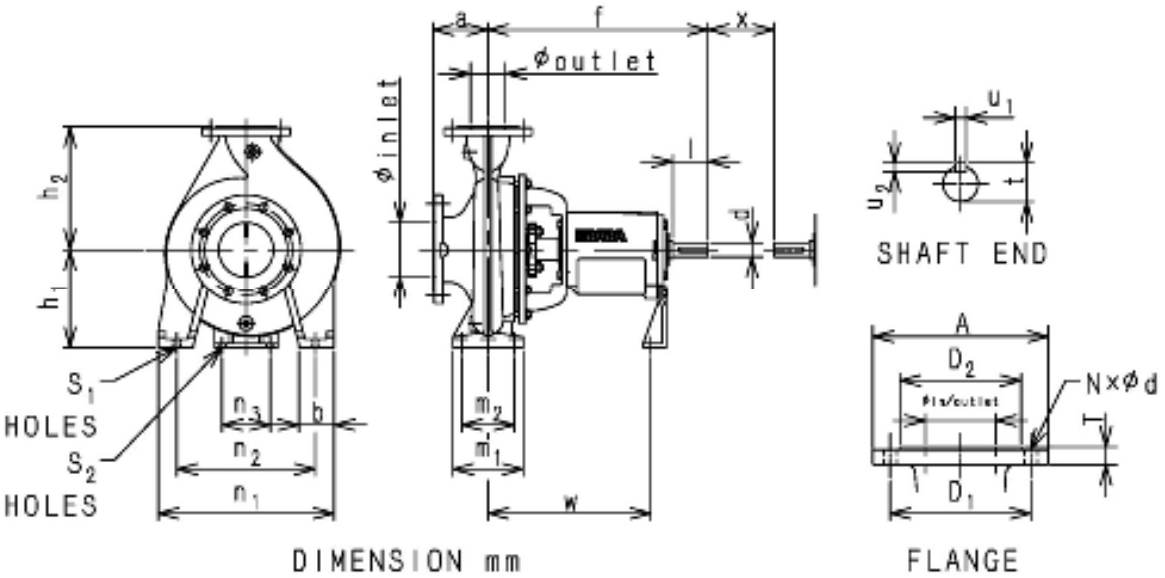


### Flange Dimension

**Material : Stainless Steel**

**Flange Standard : EN PN16** Unit : mm

| Model (suc - dis) | Suction Flange | | | | | | | Discharge Flange | | | | | | |
|---|---|---|---|---|---|---|---|---|---|---|---|---|---|---|
| | Φin | A | D1 | D2 | T | N | d | Φout | A | D1 | D2 | T | N | d |
| 50-32 | 50 | 165 | 125 | 102 | 18 | 4 | 18 | 32 | 140 | 100 | 78 | 18 | 4 | 18 |
| 65-40 | 65 | 185 | 145 | 122 | 18 | 4 | 18 | 40 | 150 | 110 | 88 | 18 | 4 | 18 |
| 80-50 | 80 | 200 | 160 | 138 | 20 | 8 | 18 | 50 | 165 | 125 | 102 | 18 | 4 | 18 |
| 100-65 | 100 | 220 | 180 | 158 | 20 | 8 | 18 | 65 | 185 | 145 | 122 | 18 | 4 | 18 |

**Flange Standard : JIS 10K** Unit : mm

| Model (suc - dis) | Suction Flange | | | | | | | Discharge Flange | | | | | | |
|---|---|---|---|---|---|---|---|---|---|---|---|---|---|---|
| | Φin | A | D1 | D2 | T | N | d | Φout | A | D1 | D2 | T | N | d |
| 50-32 | 50 | 155 | 120 | 96 | 16 | 4 | 19 | 32 | 135 | 100 | 76 | 16 | 4 | 19 |
| 65-40 | 65 | 175 | 140 | 116 | 18 | 4 | 19 | 40 | 140 | 105 | 81 | 16 | 4 | 19 |
| 80-50 | 80 | 185 | 150 | 126 | 18 | 8 | 19 | 50 | 155 | 120 | 96 | 16 | 4 | 19 |
| 100-65 | 100 | 210 | 175 | 151 | 18 | 8 | 19 | 65 | 175 | 140 | 116 | 18 | 4 | 19 |



EBARA reserves the right to make changes without prior notice.

## Dimensions of Bare Shaft Pump

Unit : mm

| Model | Shaft No. | Nominal Nozzle Diameter | | Pump | | | | Support | | | | | | | Holes for bolts | | Shaft end | | | | | (*1) | Mass (kg) |
|---|---|---|---|---|---|---|---|---|---|---|---|---|---|---|---|---|---|---|---|---|---|---|---|
| | | φ inlet | φ outlet | a | f | h1 | h2 | b | m1 | m2 | n1 | n2 | n3 | w | S1 | S2 | d | l | t | u1 | u2 | x | |
| 50-32-125 | 40 | 50 | 32 | 80 | 385 | 112 | 140 | 50 | 100 | 70 | 190 | 140 | 110 | 285 | M12 | M12 | 24 | 50 | 27 | 8 | 7 | 100 | 54 |
| 50-32-160 | 40 | 50 | 32 | 80 | 385 | 132 | 160 | 50 | 100 | 70 | 240 | 190 | 110 | 285 | M12 | M12 | 24 | 50 | 27 | 8 | 7 | 100 | 55 |
| 50-32-200 | 40 | 50 | 32 | 80 | 385 | 160 | 180 | 50 | 100 | 70 | 240 | 190 | 110 | 285 | M12 | M12 | 24 | 50 | 27 | 8 | 7 | 100 | 62 |
| 50-32-250 | 50A | 50 | 32 | 100 | 500 | 180 | 225 | 65 | 125 | 95 | 320 | 250 | 110 | 370 | M12 | M12 | 32 | 80 | 35 | 10 | 8 | 100 | 100 |
| 65-40-160 | 40 | 65 | 40 | 80 | 385 | 132 | 160 | 50 | 100 | 70 | 240 | 190 | 110 | 285 | M12 | M12 | 24 | 50 | 27 | 8 | 7 | 100 | 57 |
| 65-40-200 | 40 | 65 | 40 | 100 | 385 | 160 | 180 | 50 | 100 | 70 | 265 | 212 | 110 | 285 | M12 | M12 | 24 | 50 | 27 | 8 | 7 | 100 | 64 |
| 65-40-250 | 50A | 65 | 40 | 100 | 500 | 180 | 225 | 65 | 125 | 95 | 320 | 250 | 110 | 370 | M12 | M12 | 32 | 80 | 35 | 10 | 8 | 100 | 103 |
| 80-50-160 | 40 | 80 | 50 | 100 | 385 | 160 | 180 | 50 | 100 | 70 | 265 | 212 | 110 | 285 | M12 | M12 | 24 | 50 | 27 | 8 | 7 | 100 | 60 |
| 80-50-200 | 40 | 80 | 50 | 100 | 385 | 160 | 200 | 50 | 100 | 70 | 265 | 212 | 110 | 285 | M12 | M12 | 24 | 50 | 27 | 8 | 7 | 100 | 69 |
| 80-50-250 | 50A | 80 | 50 | 125 | 500 | 180 | 225 | 65 | 125 | 95 | 320 | 250 | 110 | 370 | M12 | M12 | 32 | 80 | 35 | 10 | 8 | 100 | 105 |
| 80-50-315 | 50B | 80 | 50 | 125 | 500 | 225 | 280 | 65 | 125 | 95 | 345 | 280 | 110 | 370 | M12 | M12 | 32 | 80 | 35 | 10 | 8 | 100 | 125 |
| 100-65-160 | 50A | 100 | 65 | 100 | 500 | 160 | 200 | 65 | 125 | 95 | 280 | 212 | 110 | 370 | M12 | M12 | 32 | 80 | 35 | 10 | 8 | 100 | 90 |
| 100-65-200 | 50A | 100 | 65 | 100 | 500 | 180 | 225 | 65 | 125 | 95 | 320 | 250 | 110 | 370 | M12 | M12 | 32 | 80 | 35 | 10 | 8 | 140 | 96 |
| 100-65-250 | 50B | 100 | 65 | 125 | 500 | 200 | 250 | 80 | 160 | 120 | 360 | 280 | 110 | 370 | M16 | M12 | 32 | 80 | 35 | 10 | 8 | 140 | 115 |
| 100-65-315 | 60 | 100 | 65 | 125 | 530 | 225 | 280 | 80 | 160 | 120 | 400 | 315 | 110 | 370 | M16 | M12 | 42 | 110 | 45 | 12 | 8 | 140 | 159 |

(*1) Dimension to be considered by the manufacturer in respect of removal of inner parts of the Pump. The dimension X must not be identical with the distance between the shafts of the pump and the driving machine. The given dimension considers the use of flexible shaft couplings with spacer. The gap is necessary for the withdrawal of the rotor toward the driven side.


EBARA reserves the right to make changes without prior notice.

**Fig.-A (for 4 anchor bolts without coupling spacer)**

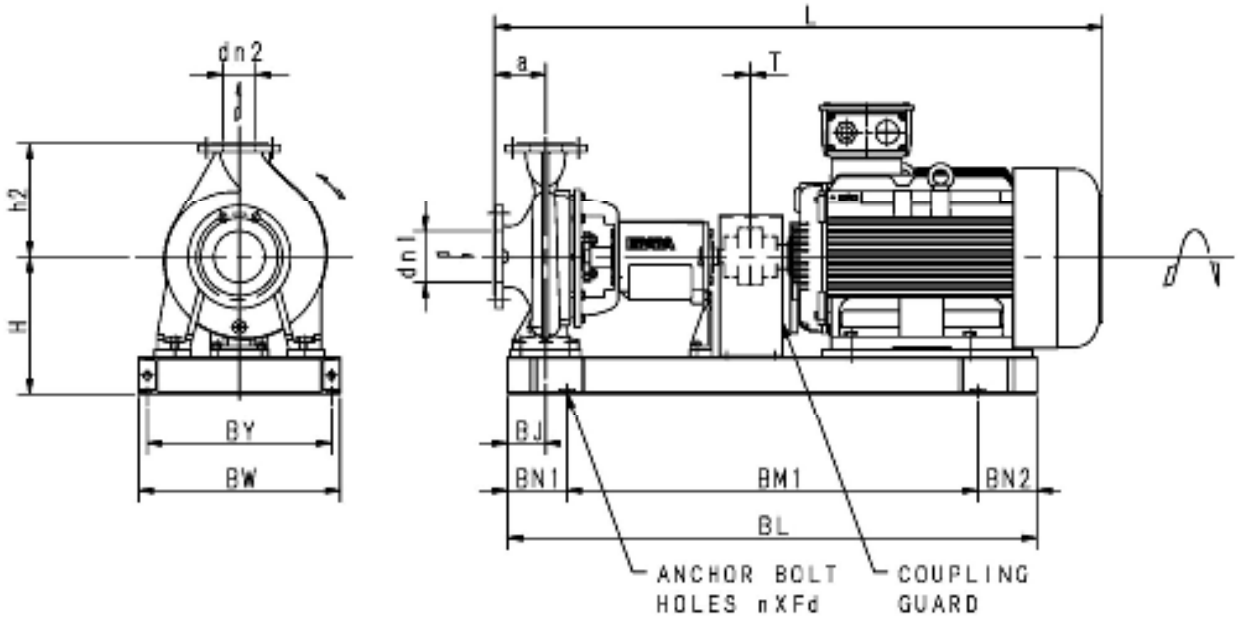


**Fig.-B (for 6 anchor bolts without coupling spacer)**

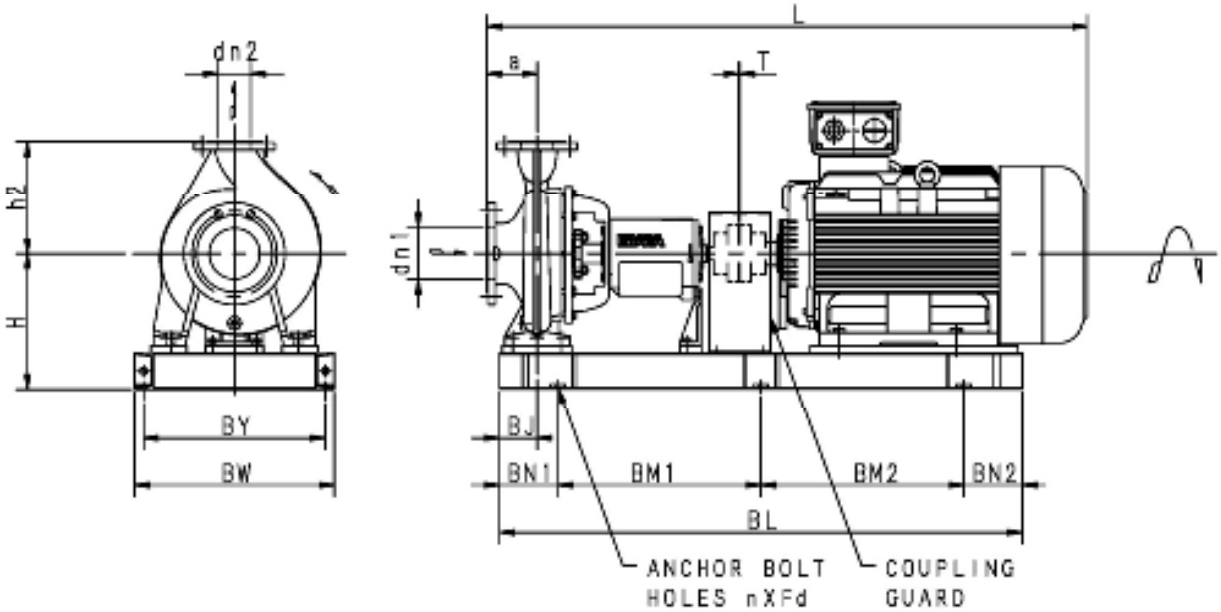



EBARA reserves the right to make changes without prior notice.

# DIMENSIONS - Dimensions of Pump with motor (2P)



## Model GSOF - 2 Pole - 50Hz / 60Hz (1/2)

○ : Applicable

** : Dimension in mm

| Model | Hz | | Power | Fig. | Nozzle | | Pump | | | Motor | | BASE | | | | | | | | | | | | Total (Approx.) | |
|---|---|---|---|---|---|---|---|---|---|---|---|---|---|---|---|---|---|---|---|---|---|---|---|---|---|
| | 50 | 60 | kW | | dn1 ** | dn2 ** | a ** | h2 ** | Mass (kg) | Frame | Mass (kg) | H ** | BJ ** | BN1 ** | BM1 ** | BM2 ** | BN2 ** | BL ** | BY ** | BW ** | T ** | n x Fd | Mass (kg) | L ** | Mass (kg) |
| 50-32-125 | ○ | | 0.75 | A | 50 | 32 | 80 | 140 | 54 | 80M1 | 14 | 190 | 70 | 130 | 540 | - | 130 | 800 | 320 | 350 | 3 | 4 x M12 | 47 | 762 | 115 |
| | ○ | | 1.1 | A | | | | | | 80M2 | 15 | 190 | | 130 | 540 | - | 130 | 800 | 320 | 350 | 3 | | 47 | 762 | 116 |
| | ○ | ○ | 1.5 | A | | | | | | 90S | 23 | 190 | | 130 | 540 | - | 130 | 800 | 320 | 350 | 3 | | 47 | 797 | 124 |
| | ○ | ○ | 2.2 | A | | | | | | 90L | 26 | 190 | | 130 | 540 | - | 130 | 800 | 320 | 350 | 3 | | 48 | 819 | 128 |
| | ○ | ○ | 3 | A | | | | | | 100L | 37 | 190 | | 130 | 540 | - | 130 | 800 | 320 | 350 | 3 | | 46 | 861 | 137 |
| | ○ | ○ | 4 | A | | | | | | 112M | 41 | 190 | | 130 | 540 | - | 130 | 800 | 350 | 380 | 3 | | 44 | 876 | 139 |
| | | ○ | 5.5 | A | | | | | | 132S1 | 59 | 230 | | 150 | 600 | - | 150 | 900 | 350 | 380 | 3 | | 61 | 913 | 174 |
| | | ○ | 7.5 | A | | | | | | 132S2 | 67 | 230 | | 150 | 600 | - | 150 | 900 | 350 | 380 | 3 | | 61 | 913 | 182 |
| 50-32-160 | ○ | | 2.2 | A | 50 | 32 | 80 | 160 | 55 | 90L | 26 | 210 | 70 | 130 | 540 | - | 130 | 800 | 350 | 380 | 3 | 4 x M12 | 44 | 819 | 125 |
| | ○ | | 3 | A | | | | | | 100L | 37 | 210 | | 130 | 540 | - | 130 | 800 | 350 | 380 | 3 | | 54 | 861 | 146 |
| | ○ | ○ | 4 | A | | | | | | 112M | 41 | 210 | | 130 | 540 | - | 130 | 800 | 350 | 380 | 3 | | 50 | 876 | 146 |
| | ○ | ○ | 5.5 | A | | | | | | 132S1 | 59 | 210 | | 150 | 600 | - | 150 | 900 | 350 | 380 | 3 | | 61 | 913 | 175 |
| | ○ | ○ | 7.5 | A | | | | | | 132S2 | 67 | 230 | | 150 | 600 | - | 150 | 900 | 350 | 380 | 3 | | 55 | 913 | 177 |
| | | ○ | 11 | A | | | | | | 160M1 | 117 | 255 | | 170 | 660 | | 170 | 1000 | 400 | 430 | 3 | | 74 | 1052 | 246 |
| 50-32-200 | ○ | | 4 | A | 50 | 32 | 80 | 180 | 62 | 112M | 41 | 255 | 70 | 130 | 540 | - | 130 | 800 | 350 | 380 | 3 | 4 x M12 | 57 | 876 | 160 |
| | ○ | | 5.5 | A | | | | | | 132S1 | 59 | 255 | | 150 | 600 | - | 150 | 900 | 350 | 380 | 3 | | 66 | 913 | 187 |
| | ○ | ○ | 7.5 | A | | | | | | 132S2 | 67 | 255 | | 150 | 600 | - | 150 | 900 | 350 | 380 | 3 | | 66 | 913 | 195 |
| | ○ | ○ | 11 | A | | | | | | 160M1 | 117 | 255 | | 170 | 660 | - | 170 | 1000 | 400 | 430 | 3 | | 66 | 1052 | 245 |
| | ○ | ○ | 15 | A | | | | | | 160M2 | 122 | 255 | | 170 | 660 | - | 170 | 1000 | 400 | 430 | 3 | | 66 | 1052 | 250 |
| | | ○ | 18.5 | A | | | | | | 160L | 134 | 255 | | 170 | 660 | - | 170 | 1000 | 400 | 430 | 3 | | 76 | 1096 | 272 |
| | | ○ | 22 | A | | | | | | 180M | 168 | 275 | | 190 | 740 | - | 190 | **1120** | 400 | 430 | 3 | | 79 | 1114 | 309 |
| | | ○ | 30 | A | | | | | | 200L1 | 253 | 320 | | 205 | 840 | - | 205 | 1250 | 440 | 480 | 4 | 4 x M16 | 109 | 1400 | 424 |
| 50-32-250 | ○ | | 5.5 | A | 50 | 32 | 100 | 225 | 100 | 132S1 | 59 | 275 | 85 | 190 | 740 | - | 190 | 1120 | 440 | 470 | 3 | 4 x M12 | 68 | 1048 | 227 |
| | ○ | | 7.5 | A | | | | | | 132S2 | 67 | 275 | | 190 | 740 | - | 190 | 1120 | 440 | 470 | 3 | | 68 | 1048 | 235 |
| | ○ | | 11 | A | | | | | | 160M1 | 117 | 275 | | 190 | 740 | - | 190 | 1120 | 440 | 470 | 3 | | 85 | 1187 | 302 |
| | ○ | ○ | 15 | A | | | | | | 160M2 | 122 | 275 | | 190 | 740 | - | 190 | 1120 | 440 | 470 | 3 | | 85 | 1187 | 307 |
| | ○ | ○ | 18.5 | A | | | | | | 160L | 134 | 300 | | 205 | 840 | - | 205 | 1250 | 440 | 480 | 3 | | 99 | 1231 | 333 |
| | | ○ | 22 | A | | | | | | 180M | 168 | 300 | | 205 | 840 | - | 205 | 1250 | 440 | 480 | 3 | 4 x M16 | 92 | 1249 | 360 |
| | | ○ | 30 | A | | | | | | 200L1 | 253 | 320 | | 205 | 840 | - | 205 | 1250 | 440 | 480 | 4 | | 109 | 1400 | 462 |
| | | ○ | 37 | A | | | | | | 200L2 | 271 | 320 | | 205 | 840 | - | 205 | 1250 | 440 | 480 | 4 | | 109 | 1400 | 480 |
| 65-40-160 | ○ | | 2.2 | A | 65 | 40 | 80 | 160 | 57 | 90L | 26 | 210 | 70 | 130 | 540 | - | 130 | 800 | 350 | 380 | 3 | 4 x M12 | 44 | 819 | 127 |
| | ○ | | 3 | A | | | | | | 100L | 37 | 210 | | 130 | 540 | - | 130 | 800 | 350 | 380 | 3 | | 54 | 861 | 148 |
| | ○ | ○ | 4 | A | | | | | | 112M | 41 | 210 | | 130 | 540 | - | 130 | 800 | 350 | 380 | 3 | | 50 | 876 | 148 |
| | ○ | ○ | 5.5 | A | | | | | | 132S1 | 59 | 210 | | 150 | 600 | - | 150 | 900 | 350 | 380 | 3 | | 50 | 913 | 166 |
| | ○ | ○ | 7.5 | A | | | | | | 132S2 | 67 | 210 | | 150 | 600 | - | 150 | 900 | 350 | 380 | 3 | | 50 | 913 | 174 |
| | ○ | ○ | 11 | A | | | | | | 160M1 | 117 | 255 | | 170 | 660 | - | 170 | 1000 | 400 | 430 | 3 | | 74 | 1052 | 248 |
| | | ○ | 15 | A | | | | | | 160M2 | 122 | 255 | | 170 | 660 | - | 170 | 1000 | 400 | 430 | 3 | | 74 | 1052 | 253 |
| | | ○ | 18.5 | A | | | | | | 160L | 134 | 255 | | 170 | 660 | - | 170 | 1000 | 400 | 430 | 3 | | 84 | 1096 | 275 |
| 65-40-200 | ○ | | 5.5 | A | 65 | 40 | 100 | 180 | 64 | 132S1 | 59 | 240 | 70 | 150 | 600 | - | 150 | 900 | 350 | 380 | 3 | 4 x M12 | 62 | 933 | 185 |
| | ○ | | 7.5 | A | | | | | | 132S2 | 67 | 240 | | 150 | 600 | - | 150 | 900 | 350 | 380 | 3 | | 62 | 933 | 193 |
| | ○ | ○ | 11 | A | | | | | | 160M1 | 117 | 255 | | 170 | 660 | - | 170 | 1000 | 400 | 430 | 3 | | 66 | 1072 | 247 |
| | ○ | ○ | 15 | A | | | | | | 160M2 | 122 | 255 | | 170 | 660 | - | 170 | 1000 | 400 | 430 | 3 | | 66 | 1072 | 252 |
| | ○ | ○ | 18.5 | A | | | | | | 160L | 134 | 255 | | 170 | 660 | - | 170 | 1000 | 400 | 430 | 3 | | 76 | 1116 | 274 |
| | ○ | ○ | 22 | A | | | | | | 180M | 168 | 275 | | 170 | 660 | - | 170 | 1000 | 400 | 430 | 3 | | 76 | 1134 | 308 |
| | | ○ | 30 | A | | | | | | 200L1 | 253 | 300 | | 190 | 740 | - | 190 | 1120 | 440 | 470 | 4 | | 97 | 1285 | 414 |
| | | ○ | 37 | A | | | | | | 200L2 | 271 | 300 | | 190 | 740 | - | 190 | 1120 | 440 | 470 | 4 | | 97 | 1285 | 432 |
| 65-40-250 | ○ | | 7.5 | A | 65 | 40 | 100 | 225 | 103 | 132S2 | 67 | 275 | 85 | 170 | 660 | - | 170 | 1000 | 400 | 430 | 3 | 4 x M12 | 63 | 1048 | 233 |
| | ○ | | 11 | A | | | | | | 160M1 | 117 | 275 | | 190 | 740 | - | 190 | 1120 | 440 | 470 | 3 | | 85 | 1187 | 305 |
| | ○ | | 15 | A | | | | | | 160M2 | 122 | 275 | | 190 | 740 | - | 190 | 1120 | 440 | 470 | 3 | | 85 | 1187 | 310 |
| | ○ | ○ | 18.5 | A | | | | | | 160L | 134 | 275 | | 190 | 740 | - | 190 | 1120 | 440 | 470 | 3 | | 85 | 1231 | 322 |
| | ○ | ○ | 22 | A | | | | | | 180M | 168 | 275 | | 190 | 740 | - | 190 | 1120 | 440 | 470 | 3 | | 77 | 1249 | 348 |
| | ○ | ○ | 30 | A | | | | | | 200L1 | 253 | 320 | | 205 | 840 | - | 205 | 1250 | 490 | 530 | 4 | | 113 | 1400 | 469 |
| | | ○ | 37 | A | | | | | | 200L2 | 271 | 320 | | 205 | 840 | - | 205 | 1250 | 490 | 530 | 4 | 4 x M16 | 113 | 1400 | 487 |
| | | ○ | 45 | A | | | | | | 225M | 323 | 345 | | 205 | 840 | - | 205 | 1250 | 490 | 530 | 4 | | 114 | 1445 | 540 |
| | | ○ | 55 | B | | | | | | 250M | 417 | 370 | | 230 | 470 | 470 | 230 | 1400 | 550 | 590 | 4 | 6 x M16 | 138 | 1532 | 658 |



EBARA reserves the right to make changes without prior notice.

## DIMENSIONS - Dimensions of Pump with motor (2P)



### Model GSOF - 2 Pole - 50Hz / 60Hz (2/2)

○ : Applicable

** : Dimension in mm

| Model | Hz | | Power | Fig. | Nozzle | | Pump | | | Motor | | BASE | | | | | | | | | | | | Total (Approx.) | |
|---|---|---|---|---|---|---|---|---|---|---|---|---|---|---|---|---|---|---|---|---|---|---|---|---|---|
| | 50 | 60 | kW | | dn1 ** | dn2 ** | a ** | h2 ** | Mass (kg) | Frame | Mass (kg) | H ** | BJ ** | BN1 ** | BM1 ** | BM2 ** | BN2 ** | BL ** | BY ** | BW ** | T ** | n x Fd | Mass (kg) | L ** | Mass (kg) |
| 80-50-160 | ○ | | 4 | A | 80 | 50 | 100 | 180 | 60 | 112M | 41 | 240 | 70 | 130 | 540 | - | 130 | 800 | 350 | 380 | 3 | 4 x M12 | 47 | 896 | 148 |
| | ○ | ○ | 5.5 | A | | | | | | 132S1 | 59 | 255 | | 150 | 600 | - | 150 | 900 | 350 | 380 | 3 | | 66 | 933 | 185 |
| | ○ | ○ | 7.5 | A | | | | | | 132S2 | 67 | 255 | | 150 | 600 | - | 150 | 900 | 350 | 380 | 3 | | 66 | 933 | 193 |
| | ○ | ○ | 11 | A | | | | | | 160M1 | 117 | 255 | | 170 | 660 | - | 170 | 1000 | 400 | 430 | 3 | | 66 | 1072 | 243 |
| | ○ | ○ | 15 | A | | | | | | 160M2 | 122 | 255 | | 170 | 660 | - | 170 | 1000 | 400 | 430 | 3 | | 66 | 1072 | 248 |
| | | ○ | 18.5 | A | | | | | | 160L | 134 | 255 | | 170 | 660 | - | 170 | 1000 | 400 | 430 | 3 | | 76 | 1116 | 270 |
| | | ○ | 22 | A | | | | | | 180M | 168 | 275 | | 170 | 660 | - | 170 | 1000 | 400 | 430 | 3 | | 76 | 1134 | 304 |
| | | ○ | 30 | A | | | | | | 200L1 | 253 | 300 | | 190 | 740 | - | 190 | 1120 | 440 | 470 | 4 | | 97 | 1285 | 410 |
| 80-50-200 | ○ | | 7.5 | A | 80 | 50 | 100 | 200 | 69 | 132S2 | 67 | 255 | 70 | 150 | 600 | - | 150 | 900 | 350 | 380 | 3 | 4 x M12 | 66 | 933 | 202 |
| | ○ | ○ | 11 | A | | | | | | 160M1 | 117 | 255 | | 170 | 660 | - | 170 | 1000 | 400 | 430 | 3 | | 66 | 1072 | 252 |
| | ○ | ○ | 15 | A | | | | | | 160M2 | 122 | 255 | | 170 | 660 | - | 170 | 1000 | 400 | 430 | 3 | | 66 | 1072 | 257 |
| | ○ | ○ | 18.5 | A | | | | | | 160L | 134 | 255 | | 170 | 660 | - | 170 | 1000 | 400 | 430 | 3 | | 76 | 1116 | 279 |
| | ○ | ○ | 22 | A | | | | | | 180M | 168 | 275 | | 170 | 660 | - | 170 | 1000 | 440 | 470 | 3 | | 79 | 1134 | 316 |
| | ○ | ○ | 30 | A | | | | | | 200L1 | 253 | 300 | | 190 | 740 | - | 190 | 1120 | 440 | 470 | 4 | | 97 | 1285 | 419 |
| | | ○ | 37 | A | | | | | | 200L2 | 271 | 300 | | 190 | 740 | - | 190 | 1120 | 440 | 470 | 4 | | 97 | 1285 | 437 |
| | | ○ | 45 | A | | | | | | 225M | 323 | 345 | | 190 | 740 | - | 190 | 1120 | 490 | 530 | 4 | 4 x M16 | 113 | 1330 | 505 |
| 80-50-250 | ○ | | 11 | A | 80 | 50 | 125 | 225 | 105 | 160M1 | 117 | 275 | 85 | 190 | 740 | - | 190 | 1120 | 440 | 470 | 3 | 4 x M12 | 85 | 1212 | 307 |
| | ○ | | 15 | A | | | | | | 160M2 | 122 | 275 | | 190 | 740 | - | 190 | 1120 | 440 | 470 | 3 | | 85 | 1212 | 312 |
| | ○ | | 18.5 | A | | | | | | 160L | 134 | 275 | | 190 | 740 | - | 190 | 1120 | 440 | 470 | 3 | | 85 | 1256 | 324 |
| | ○ | ○ | 22 | A | | | | | | 180M | 168 | 275 | | 190 | 740 | - | 190 | 1120 | 440 | 470 | 3 | | 77 | 1274 | 350 |
| | ○ | ○ | 30 | A | | | | | | 200L1 | 253 | 320 | | 205 | 840 | - | 205 | 1250 | 490 | 530 | 4 | 4 x M16 | 113 | 1425 | 471 |
| | ○ | ○ | 37 | A | | | | | | 200L2 | 271 | 320 | | 205 | 840 | - | 205 | 1250 | 490 | 530 | 4 | | 113 | 1425 | 489 |
| | ○ | ○ | 45 | A | | | | | | 225M | 323 | 345 | | 205 | 840 | - | 205 | 1250 | 490 | 530 | 4 | | 114 | 1470 | 542 |
| | ○ | ○ | 55 | B | | | | | | 250M | 417 | 370 | | 230 | 470 | 470 | 230 | 1400 | 550 | 590 | 4 | 6 x M16 | 138 | 1558 | 660 |
| | | ○ | 75 | B | | | | | | 280S | 530 | 420 | | 230 | 470 | 470 | 230 | 1400 | 600 | 640 | 4 | 6 x M20 | 178 | 1636 | 813 |
| 100-65-160 | ○ | | 5.5 | A | 100 | 65 | 100 | 200 | 90 | 132S1 | 59 | 255 | 85 | 170 | 660 | - | 170 | 1000 | 400 | 430 | 3 | 4 x M12 | 73 | 1048 | 222 |
| | ○ | ○ | 7.5 | A | | | | | | 132S2 | 67 | 255 | | 170 | 660 | - | 170 | 1000 | 400 | 430 | 3 | | 73 | 1048 | 230 |
| | ○ | ○ | 11 | A | | | | | | 160M1 | 117 | 255 | | 190 | 740 | - | 190 | 1120 | 400 | 430 | 3 | | 72 | 1187 | 279 |
| | ○ | ○ | 15 | A | | | | | | 160M2 | 122 | 255 | | 190 | 740 | - | 190 | 1120 | 400 | 430 | 3 | | 72 | 1187 | 284 |
| | ○ | ○ | 18.5 | A | | | | | | 160L | 134 | 255 | | 190 | 740 | - | 190 | 1120 | 400 | 430 | 3 | | 80 | 1231 | 304 |
| | ○ | ○ | 22 | A | | | | | | 180M | 168 | 275 | | 190 | 740 | - | 190 | 1120 | 440 | 470 | 3 | | 83 | 1249 | 341 |
| | | ○ | 30 | A | | | | | | 200L1 | 253 | 320 | | 205 | 840 | - | 205 | 1250 | 440 | 480 | 4 | 4 x M16 | 115 | 1400 | 458 |
| | | ○ | 37 | A | | | | | | 200L2 | 271 | 320 | | 205 | 840 | - | 205 | 1250 | 440 | 480 | 4 | | 115 | 1400 | 476 |
| 100-65-200 | ○ | | 7.5 | A | 100 | 65 | 100 | 225 | 96 | 132S2 | 67 | 275 | 85 | 170 | 660 | - | 170 | 1000 | 400 | 430 | 3 | 4 x M12 | 63 | 1048 | 226 |
| | ○ | | 11 | A | | | | | | 160M1 | 117 | 275 | | 190 | 740 | - | 190 | 1120 | 400 | 430 | 3 | | 82 | 1187 | 295 |
| | ○ | | 15 | A | | | | | | 160M2 | 122 | 275 | | 190 | 740 | - | 190 | 1120 | 400 | 430 | 3 | | 82 | 1187 | 300 |
| | ○ | ○ | 18.5 | A | | | | | | 160L | 134 | 275 | | 190 | 740 | - | 190 | 1120 | 400 | 430 | 3 | | 82 | 1231 | 312 |
| | ○ | ○ | 22 | A | | | | | | 180M | 168 | 275 | | 190 | 740 | - | 190 | 1120 | 400 | 430 | 3 | | 75 | 1249 | 339 |
| | ○ | ○ | 30 | A | | | | | | 200L1 | 253 | 320 | | 205 | 840 | - | 205 | 1250 | 490 | 530 | 4 | 4 x M16 | 113 | 1400 | 462 |
| | ○ | ○ | 37 | A | | | | | | 200L2 | 271 | 320 | | 205 | 840 | - | 205 | 1250 | 490 | 530 | 4 | | 113 | 1400 | 480 |
| | | ○ | 45 | A | | | | | | 225M | 323 | 345 | | 205 | 840 | - | 205 | 1250 | 490 | 530 | 4 | | 114 | 1446 | 533 |
| | | ○ | 55 | B | | | | | | 250M | 417 | 370 | | 230 | 470 | 470 | 230 | 1400 | 550 | 590 | 4 | 6 x M16 | 136 | 1533 | 649 |
| | | ○ | 75 | B | | | | | | 280S | 530 | 420 | | 230 | 470 | 470 | 230 | 1400 | 600 | 640 | 4 | 6 x M20 | 167 | 1636 | 793 |
| 100-65-250 | ○ | | 18.5 | A | 100 | 65 | 125 | 250 | 115 | 160L | 134 | 320 | 100 | 205 | 840 | - | 205 | 1250 | 490 | 530 | 3 | 4 x M16 | 108 | 1256 | 357 |
| | ○ | – | 22 | A | | | | | | 180M | 168 | 320 | | 205 | 840 | - | 205 | 1250 | 490 | 530 | 3 | | 109 | 1274 | 392 |
| | ○ | – | 30 | A | | | | | | 200L1 | 253 | 320 | | 205 | 840 | - | 205 | 1250 | 490 | 530 | 4 | | 109 | 1425 | 477 |
| | ○ | ○ | 37 | A | | | | | | 200L2 | 271 | 320 | | 205 | 840 | - | 205 | 1250 | 490 | 530 | 4 | | 109 | 1425 | 495 |
| | ○ | ○ | 45 | A | | | | | | 225M | 323 | 345 | | 205 | 840 | - | 205 | 1250 | 490 | 530 | 4 | | 120 | 1470 | 558 |
| | ○ | ○ | 55 | B | | | | | | 250M | 417 | 370 | | 230 | 470 | 470 | 230 | 1400 | 550 | 590 | 4 | 6 x M16 | 137 | 1558 | 669 |
| | ○ | ○ | 75 | B | | | | | | 280S | 530 | 420 | | 230 | 470 | 470 | 230 | 1400 | 600 | 640 | 4 | 6 x M20 | 167 | 1636 | 812 |
| | | ○ | 90 | B | | | | | | 280M | 665 | 420 | | 270 | 530 | 530 | 270 | 1600 | 670 | 710 | 4 | 6 x M20 | 213 | 1684 | 993 |
| | | ○ | 110 | B | | | | | | 315S | 944 | 460 | | 270 | 530 | 530 | 270 | 1600 | 670 | 710 | 4 | 6 x M20 | 213 | 1761 | 1157 |
| | | ○ | 132 | B | | | | | | 315M | 1054 | 460 | | 270 | 530 | 530 | 270 | 1600 | 670 | 710 | 4 | 6 x M20 | 220 | 1861 | 1274 |



EBARA reserves the right to make changes without prior notice.

# DIMENSIONS - Dimensions of Pump with motor (4P)



## Model GSOF - 4 Pole - 50Hz / 60Hz (1/2)

○ : Applicable ** : Dimension in mm

| Model | Hz | | Power | Fig. | Nozzle | | Pump | | | Motor | | BASE | | | | | | | | | | | | Total (Approx.) | |
|---|---|---|---|---|---|---|---|---|---|---|---|---|---|---|---|---|---|---|---|---|---|---|---|---|---|
| | 50 | 60 | kW | | dn1 ** | dn2 ** | a ** | h2 ** | Mass (kg) | Frame | Mass (kg) | H ** | BJ ** | BN1 ** | BM1 ** | BM2 ** | BN2 ** | BL ** | BY ** | BW ** | T ** | n x Fd | Mass (kg) | L ** | Mass (kg) |
| 50-32-125 | ○ | ○ | 0.55 | A | 50 | 32 | 80 | 140 | 54 | 80M1 | 18 | 190 | 70 | 130 | 540 | - | 130 | 800 | 320 | 350 | 3 | 4 x M12 | 47 | 762 | 119 |
| | ○ | ○ | 0.75 | A | | | | | | 80M2 | 19 | 190 | | 130 | 540 | - | 130 | 800 | 320 | 350 | 3 | | 47 | 762 | 120 |
| | | ○ | 1.1 | A | | | | | | 90S | 23 | 190 | | 130 | 540 | - | 130 | 800 | 320 | 350 | 3 | | 47 | 797 | 124 |
| 50-32-160 | ○ | | 0.55 | A | 50 | 32 | 80 | 160 | 55 | 80M1 | 18 | 210 | 70 | 130 | 540 | - | 130 | 800 | 320 | 350 | 3 | 4 × M12 | 42 | 762 | 115 |
| | ○ | ○ | 0.75 | A | | | | | | 80M2 | 19 | 210 | | 130 | 540 | - | 130 | 800 | 320 | 350 | 3 | | 42 | 762 | 116 |
| | ○ | ○ | 1.1 | A | | | | | | 90S | 23 | 210 | | 130 | 540 | - | 130 | 800 | 320 | 350 | 3 | | 42 | 797 | 120 |
| | | ○ | 1.5 | A | | | | | | 90L | 26 | 240 | | 130 | 540 | - | 130 | 800 | 320 | 350 | 3 | | 46 | 819 | 127 |
| 50-32-200 | ○ | | 0.75 | A | 50 | 32 | 80 | 180 | 62 | 80M2 | 19 | 240 | 70 | 130 | 540 | - | 130 | 800 | 320 | 350 | 3 | 4 × M12 | 44 | 762 | 125 |
| | ○ | ○ | 1.1 | A | | | | | | 90S | 23 | 240 | | 130 | 540 | - | 130 | 800 | 320 | 350 | 3 | | 44 | 797 | 129 |
| | ○ | ○ | 1.5 | A | | | | | | 90L | 26 | 240 | | 130 | 540 | - | 130 | 800 | 320 | 350 | 3 | | 46 | 819 | 134 |
| | ○ | ○ | 2.2 | A | | | | | | 100L1 | 38 | 240 | | 130 | 540 | - | 130 | 800 | 320 | 350 | 3 | | 46 | 861 | 146 |
| | | ○ | 3 | A | | | | | | 100L2 | 43 | 240 | | 130 | 540 | - | 130 | 800 | 320 | 350 | 3 | | 47 | 861 | 152 |
| | | ○ | 4 | A | | | | | | 112M | 48 | 240 | | 130 | 540 | - | 130 | 800 | 320 | 350 | 3 | | 47 | 876 | 157 |
| 50-32-250 | ○ | | 1.1 | A | 50 | 32 | 100 | 225 | 100 | 90S | 23 | 275 | 85 | 150 | 600 | - | 150 | 900 | 350 | 380 | 3 | 4 × M12 | 60 | 932 | 183 |
| | ○ | ○ | 1.5 | A | | | | | | 90L | 26 | 275 | | 150 | 600 | - | 150 | 900 | 350 | 380 | 3 | | 60 | 954 | 186 |
| | ○ | ○ | 2.2 | A | | | | | | 100L1 | 38 | 275 | | 170 | 660 | - | 170 | 1000 | 400 | 430 | 3 | | 64 | 996 | 202 |
| | ○ | ○ | 3 | A | | | | | | 100L2 | 43 | 275 | | 170 | 660 | - | 170 | 1000 | 400 | 430 | 3 | | 64 | 996 | 207 |
| | | ○ | 4 | A | | | | | | 112M | 48 | 275 | | 170 | 660 | - | 170 | 1000 | 400 | 430 | 3 | | 62 | 1011 | 210 |
| | | ○ | 5.5 | A | | | | | | 132S | 69 | 275 | | 170 | 660 | - | 170 | 1000 | 400 | 430 | 3 | | 63 | 1048 | 232 |
| 65-40-160 | ○ | | 0.75 | A | 65 | 40 | 80 | 160 | 57 | 80M2 | 19 | 210 | 70 | 130 | 540 | - | 130 | 800 | 320 | 350 | 3 | 4 × M12 | 42 | 762 | 118 |
| | ○ | ○ | 1.1 | A | | | | | | 90S | 23 | 210 | | 130 | 540 | - | 130 | 800 | 320 | 350 | 3 | | 42 | 797 | 122 |
| | ○ | ○ | 1.5 | A | | | | | | 90L | 26 | 210 | | 130 | 540 | - | 130 | 800 | 320 | 350 | 3 | | 42 | 819 | 125 |
| | | ○ | 2.2 | A | | | | | | 100L1 | 38 | 210 | | 130 | 540 | - | 130 | 800 | 320 | 350 | 3 | | 51 | 861 | 146 |
| | | ○ | 3 | A | | | | | | 100L2 | 43 | 210 | | 130 | 540 | - | 130 | 800 | 320 | 350 | 3 | | 52 | 861 | 152 |
| 65-40-200 | ○ | | 0.75 | A | 65 | 40 | 100 | 180 | 64 | 80M2 | 19 | 240 | 70 | 130 | 540 | - | 130 | 800 | 320 | 350 | 3 | 4 × M12 | 44 | 782 | 127 |
| | ○ | ○ | 1.1 | A | | | | | | 90S | 23 | 240 | | 130 | 540 | - | 130 | 800 | 320 | 350 | 3 | | 44 | 817 | 131 |
| | ○ | ○ | 1.5 | A | | | | | | 90L | 26 | 240 | | 130 | 540 | - | 130 | 800 | 320 | 350 | 3 | | 46 | 839 | 136 |
| | ○ | ○ | 2.2 | A | | | | | | 100L1 | 38 | 240 | | 130 | 540 | - | 130 | 800 | 320 | 350 | 3 | | 46 | 881 | 148 |
| | ○ | ○ | 3 | A | | | | | | 100L2 | 43 | 240 | | 130 | 540 | - | 130 | 800 | 320 | 350 | 3 | | 46 | 881 | 153 |
| | | ○ | 4 | A | | | | | | 112M | 48 | 240 | | 130 | 540 | - | 130 | 800 | 320 | 350 | 3 | | 47 | 896 | 159 |
| | | ○ | 5.5 | A | | | | | | 132S | 69 | 240 | | 150 | 600 | - | 150 | 900 | 350 | 380 | 3 | | 62 | 933 | 195 |
| 65-40-250 | ○ | | 1.1 | A | 65 | 40 | 100 | 225 | 103 | 90S | 23 | 275 | 85 | 150 | 600 | - | 150 | 900 | 350 | 380 | 3 | 4 × M12 | 60 | 932 | 186 |
| | ○ | | 1.5 | A | | | | | | 90L | 26 | 275 | | 150 | 600 | - | 150 | 900 | 350 | 380 | 3 | | 60 | 954 | 189 |
| | ○ | ○ | 2.2 | A | | | | | | 100L1 | 38 | 275 | | 170 | 660 | - | 170 | 1000 | 400 | 430 | 3 | | 64 | 996 | 205 |
| | ○ | ○ | 3 | A | | | | | | 100L2 | 43 | 275 | | 170 | 660 | - | 170 | 1000 | 400 | 430 | 3 | | 64 | 996 | 210 |
| | ○ | ○ | 4 | A | | | | | | 112M | 48 | 275 | | 170 | 660 | - | 170 | 1000 | 400 | 430 | 3 | | 64 | 1011 | 215 |
| | | ○ | 5.5 | A | | | | | | 132S | 69 | 275 | | 170 | 660 | - | 170 | 1000 | 400 | 430 | 3 | | 63 | 1048 | 235 |
| | | ○ | 7.5 | A | | | | | | 132M | 77 | 275 | | 170 | 660 | - | 170 | 1000 | 400 | 430 | 3 | | 64 | 1086 | 244 |
| 80-50-160 | ○ | ○ | 0.75 | A | 80 | 50 | 100 | 180 | 60 | 80M2 | 19 | 240 | 70 | 130 | 540 | - | 130 | 800 | 320 | 350 | 3 | 4 × M12 | 44 | 782 | 123 |
| | ○ | ○ | 1.1 | A | | | | | | 90S | 23 | 240 | | 130 | 540 | - | 130 | 800 | 320 | 350 | 3 | | 44 | 817 | 127 |
| | ○ | ○ | 1.5 | A | | | | | | 90L | 26 | 240 | | 130 | 540 | - | 130 | 800 | 320 | 350 | 3 | | 46 | 839 | 132 |
| | ○ | ○ | 2.2 | A | | | | | | 100L1 | 38 | 240 | | 130 | 540 | - | 130 | 800 | 320 | 350 | 3 | | 46 | 881 | 144 |
| | | ○ | 3 | A | | | | | | 100L2 | 43 | 240 | | 130 | 540 | - | 130 | 800 | 320 | 350 | 3 | | 47 | 881 | 150 |
| | | ○ | 4 | A | | | | | | 112M | 48 | 240 | | 130 | 540 | - | 130 | 800 | 320 | 350 | 3 | | 47 | 896 | 155 |
| 80-50-200 | ○ | | 1.1 | A | 80 | 50 | 100 | 200 | 69 | 90S | 23 | 240 | 70 | 130 | 540 | - | 130 | 800 | 320 | 350 | 3 | 4 × M12 | 44 | 817 | 136 |
| | ○ | ○ | 1.5 | A | | | | | | 90L | 26 | 240 | | 130 | 540 | - | 130 | 800 | 320 | 350 | 3 | | 46 | 839 | 141 |
| | ○ | ○ | 2.2 | A | | | | | | 100L1 | 38 | 240 | | 130 | 540 | - | 130 | 800 | 320 | 350 | 3 | | 46 | 881 | 153 |
| | ○ | ○ | 3 | A | | | | | | 100L2 | 43 | 240 | | 130 | 540 | - | 130 | 800 | 320 | 350 | 3 | | 46 | 881 | 158 |
| | ○ | ○ | 4 | A | | | | | | 112M | 48 | 240 | | 130 | 540 | - | 130 | 800 | 320 | 350 | 3 | | 49 | 896 | 166 |
| | | ○ | 5.5 | A | | | | | | 132S | 69 | 240 | | 150 | 600 | - | 150 | 900 | 350 | 380 | 3 | | 62 | 933 | 200 |
| 80-50-250 | ○ | | 1.5 | A | 80 | 50 | 125 | 225 | 105 | 90L | 26 | 275 | 85 | 150 | 600 | - | 150 | 900 | 350 | 380 | 3 | 4 × M12 | 60 | 979 | 191 |
| | ○ | | 2.2 | A | | | | | | 100L1 | 38 | 275 | | 170 | 660 | - | 170 | 1000 | 400 | 430 | 3 | | 64 | 1021 | 207 |
| | ○ | ○ | 3 | A | | | | | | 100L2 | 43 | 275 | | 170 | 660 | - | 170 | 1000 | 400 | 430 | 3 | | 64 | 1021 | 212 |
| | ○ | ○ | 4 | A | | | | | | 112M | 48 | 275 | | 170 | 660 | - | 170 | 1000 | 400 | 430 | 3 | | 64 | 1036 | 217 |
| | ○ | ○ | 5.5 | A | | | | | | 132S | 69 | 275 | | 170 | 660 | - | 170 | 1000 | 400 | 430 | 3 | | 63 | 1073 | 237 |
| | ○ | ○ | 7.5 | A | | | | | | 132M | 77 | 275 | | 170 | 660 | - | 170 | 1000 | 400 | 430 | 3 | | 64 | 1111 | 246 |
| | | ○ | 11 | A | | | | | | 160M | 120 | 275 | | 190 | 740 | - | 190 | 1120 | 400 | 430 | 3 | | 82 | 1212 | 307 |
| 80-50-315 | ○ | | 3 | A | 80 | 50 | 125 | 280 | 125 | 100L2 | 43 | 320 | 85 | 170 | 660 | - | 170 | 1000 | 400 | 430 | 3 | 4 × M12 | 68 | 1021 | 236 |
| | ○ | | 4 | A | | | | | | 112M | 48 | 320 | | 170 | 660 | - | 170 | 1000 | 400 | 430 | 3 | | 68 | 1036 | 241 |
| | ○ | ○ | 5.5 | A | | | | | | 132S | 69 | 320 | | 170 | 660 | - | 170 | 1000 | 400 | 430 | 3 | | 68 | 1073 | 262 |
| | ○ | ○ | 7.5 | A | | | | | | 132M | 77 | 320 | | 170 | 660 | - | 170 | 1000 | 400 | 430 | 3 | | 70 | 1111 | 272 |
| | ○ | ○ | 11 | A | | | | | | 160M | 120 | 320 | | 190 | 740 | - | 190 | 1120 | 440 | 470 | 3 | | 76 | 1212 | 321 |
| | ○ | ○ | 15 | A | | | | | | 160L | 133 | 320 | | 190 | 740 | - | 190 | 1120 | 440 | 470 | 3 | | 90 | 1256 | 348 |
| | | ○ | 18.5 | A | | | | | | 180M | 172 | 320 | | 190 | 740 | - | 190 | 1120 | 440 | 470 | 3 | | 75 | 1274 | 372 |
| | | ○ | 22 | A | | | | | | 180L | 195 | 370 | | 205 | 840 | - | 205 | 1250 | 490 | 530 | 3 | 4 × M16 | 104 | 1342 | 424 |



EBARA reserves the right to make changes without prior notice.

## DIMENSIONS - Dimensions of Pump with motor (4P)



### Model GSOF - 4 Pole - 50Hz / 60Hz (2/2)

○ : Applicable ** : Dimension in mm

| Model | Hz | | Power | Fig. | Nozzle | | Pump | | | Motor | | BASE | | | | | | | | | | | | Total (Approx.) | |
|---|---|---|---|---|---|---|---|---|---|---|---|---|---|---|---|---|---|---|---|---|---|---|---|---|---|
| | 50 | 60 | kW | | dn1 ** | dn2 ** | a ** | h2 ** | Mass (kg) | Frame | Mass (kg) | H ** | BJ ** | BN1 ** | BM1 ** | BM2 ** | BN2 ** | BL ** | BY ** | BW ** | T ** | n x Fd | Mass (kg) | L ** | Mass (kg) |
| 100-65-160 | ○ | | 0.75 | A | 100 | 65 | 100 | 200 | 90 | 80M2 | 19 | 255 | 85 | 150 | 600 | - | 150 | 900 | 350 | 380 | 3 | 4 × M12 | 58 | 897 | 167 |
| | ○ | ○ | 1.1 | A | | | | | | 90S | 23 | 255 | | 150 | 600 | - | 150 | 900 | 350 | 380 | 3 | | 59 | 932 | 172 |
| | ○ | ○ | 1.5 | A | | | | | | 90L | 26 | 255 | | 150 | 600 | - | 150 | 900 | 350 | 380 | 3 | | 59 | 954 | 175 |
| | ○ | ○ | 2.2 | A | | | | | | 100L1 | 38 | 255 | | 170 | 660 | - | 170 | 1000 | 400 | 430 | 3 | | 63 | 996 | 191 |
| | ○ | ○ | 3 | A | | | | | | 100L2 | 43 | 255 | | 170 | 660 | - | 170 | 1000 | 400 | 430 | 3 | | 63 | 996 | 196 |
| | | ○ | 4 | A | | | | | | 112M | 48 | 255 | | 170 | 660 | - | 170 | 1000 | 400 | 430 | 3 | | 61 | 1011 | 199 |
| | | ○ | 5.5 | A | | | | | | 132S | 69 | 255 | | 170 | 660 | - | 170 | 1000 | 400 | 430 | 3 | | 73 | 1048 | 232 |
| 100-65-200 | ○ | | 1.5 | A | 100 | 65 | 100 | 225 | 96 | 90L | 26 | 275 | 85 | 150 | 600 | - | 150 | 900 | 350 | 380 | 3 | 4 × M12 | 60 | 954 | 182 |
| | ○ | ○ | 2.2 | A | | | | | | 100L1 | 38 | 275 | | 170 | 660 | - | 170 | 1000 | 400 | 430 | 3 | | 64 | 996 | 198 |
| | ○ | ○ | 3 | A | | | | | | 100L2 | 43 | 275 | | 170 | 660 | - | 170 | 1000 | 400 | 430 | 3 | | 64 | 996 | 203 |
| | ○ | ○ | 4 | A | | | | | | 112M | 48 | 275 | | 170 | 660 | - | 170 | 1000 | 400 | 430 | 3 | | 64 | 1011 | 208 |
| | ○ | ○ | 5.5 | A | | | | | | 132S | 69 | 275 | | 170 | 660 | - | 170 | 1000 | 400 | 430 | 3 | | 63 | 1048 | 228 |
| | | ○ | 7.5 | A | | | | | | 132M | 77 | 275 | | 170 | 660 | - | 170 | 1000 | 400 | 430 | 3 | | 64 | 1086 | 237 |
| | | ○ | 11 | A | | | | | | 160M | 120 | 275 | | 190 | 740 | - | 190 | 1120 | 440 | 470 | 3 | | 85 | 1187 | 301 |
| 100-65-250 | ○ | | 2.2 | A | 100 | 65 | 125 | 250 | 115 | 100L1 | 38 | 295 | 100 | 170 | 660 | - | 170 | 1000 | 400 | 430 | 3 | 4 × M12 | 68 | 1021 | 221 |
| | ○ | | 3 | A | | | | | | 100L2 | 43 | 295 | | 170 | 660 | - | 170 | 1000 | 400 | 430 | 3 | | 68 | 1021 | 226 |
| | ○ | ○ | 4 | A | | | | | | 112M | 48 | 295 | | 170 | 660 | - | 170 | 1000 | 400 | 430 | 3 | | 68 | 1036 | 231 |
| | ○ | ○ | 5.5 | A | | | | | | 132S | 69 | 295 | | 170 | 660 | - | 170 | 1000 | 400 | 430 | 3 | | 66 | 1073 | 250 |
| | ○ | ○ | 7.5 | A | | | | | | 132M | 77 | 295 | | 190 | 740 | - | 190 | 1120 | 400 | 430 | 3 | | 71 | 1111 | 263 |
| | | ○ | 11 | A | | | | | | 160M | 120 | 295 | | 190 | 740 | - | 190 | 1120 | 400 | 430 | 3 | | 94 | 1212 | 329 |
| | | ○ | 15 | A | | | | | | 160L | 133 | 320 | | 205 | 840 | - | 205 | 1250 | 440 | 480 | 3 | 4 × M16 | 103 | 1256 | 351 |
| 100-65-315 | ○ | ○ | 4 | A | 100 | 65 | 125 | 280 | 159 | 112M | 48 | 320 | 100 | 170 | 660 | - | 170 | 1000 | 440 | 470 | 3 | 4 × M12 | 75 | 1066 | 282 |
| | ○ | ○ | 5.5 | A | | | | | | 132S | 69 | 320 | | 170 | 660 | - | 170 | 1000 | 440 | 470 | 3 | | 74 | 1103 | 302 |
| | ○ | ○ | 7.5 | A | | | | | | 132M | 77 | 320 | | 190 | 740 | - | 190 | 1120 | 440 | 470 | 3 | | 77 | 1141 | 313 |
| | ○ | ○ | 11 | A | | | | | | 160M | 120 | 345 | | 205 | 840 | - | 205 | 1250 | 490 | 530 | 3 | 4 × M16 | 97 | 1242 | 376 |
| | ○ | ○ | 15 | A | | | | | | 160L | 133 | 345 | | 205 | 840 | - | 205 | 1250 | 490 | 530 | 3 | | 110 | 1286 | 402 |
| | ○ | ○ | 18.5 | A | | | | | | 180M | 172 | 345 | | 205 | 840 | - | 205 | 1250 | 490 | 530 | 3 | | 96 | 1304 | 427 |
| | | ○ | 22 | A | | | | | | 180L | 195 | 370 | | 205 | 840 | - | 205 | 1250 | 490 | 530 | 3 | 4 × M16 | 104 | 1342 | 458 |
| | | ○ | 30 | B | | | | | | 200L | 268 | 370 | | 230 | 470 | 470 | 230 | 1400 | 550 | 590 | 4 | 6 x M16 | 121 | 1455 | 548 |



EBARA reserves the right to make changes without prior notice.

## CONSTRUCTION - Sectional view



### Standard feature
### Mechanical seal type with oil lubrication bearings

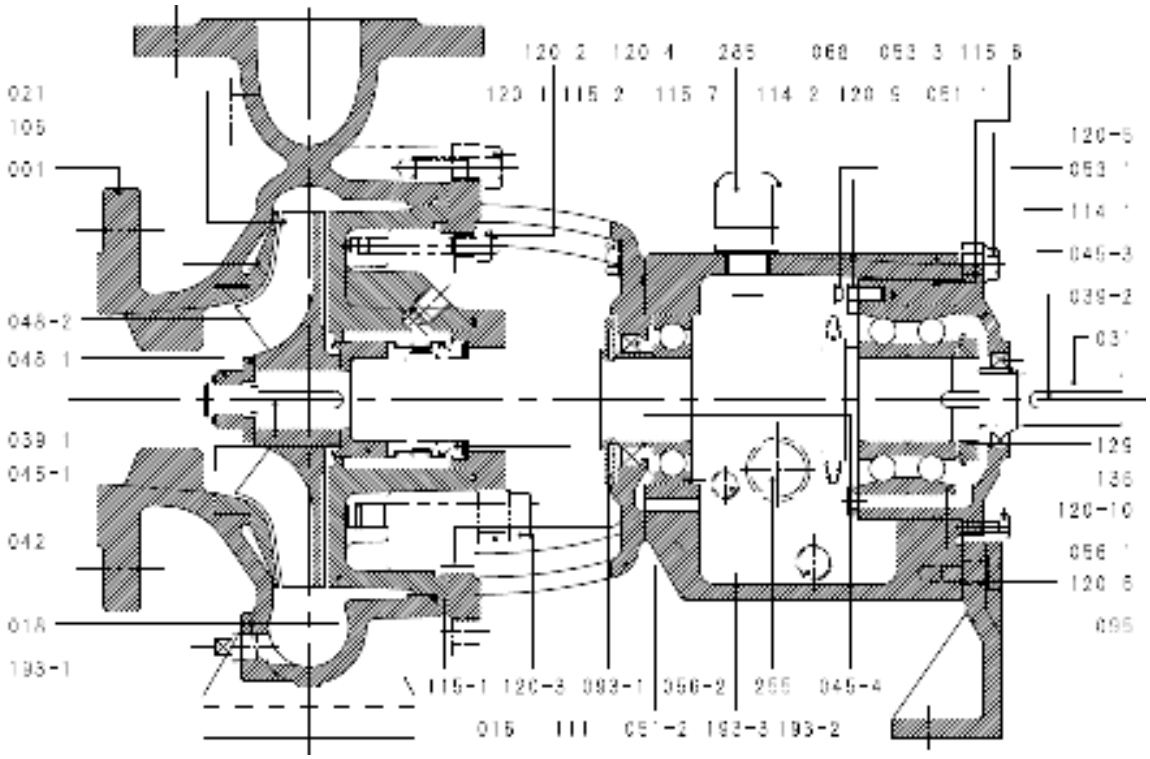


| NO. | NAME OF PART | Q'ty |
|---|---|---|
| 001 | CASING | 1 |
| 016 | SEAL GLAND PLATE | 1 |
| 018 | GLAND COVER | 1 |
| 021 | IMPELLER | 1 |
| 031 | SHAFT | 1 |
| 039-1 | KEY - IMPELLER | 1 |
| 039-2 | KEY - COUPLING | 1 |
| 042 | SEAL SPACER | 1 |
| 045-1 | IMPELLER SHIM | 1 set |
| 045-3 | OIL SEAL SLEEVE (M) | 1 |
| 045-4 | OIL SEAL SLEEVE (P) | 1 |
| 048-1 | IMPELLER NUT | 1 |
| 048-2 | IMPELLER WASHER | 1 |
| 051-1 | BEARING HOUSING | 1 |
| 051-2 | ADAPTER - BG HOUSING | 1 |
| 053-1 | BEARING COVER (M) | 1 |
| 053-3 | STOPPER - BG (M) | 1 |
| 056-1 | BALL BEARING (M) | 1 set |
| 056-2 | BALL BEARING (P) | 1 |
| 068 | OIL FLINGER | 1 |
| 093-1 | DEFLECTOR | 1 |
| 095 | STAY | 1 |
| 106 | SIDE PLATE | 1 |

| NO. | NAME OF PART | Q'ty |
|---|---|---|
| 111 | MECHANICAL SEAL | 1 set |
| 114-1 | OIL SEAL (M) | 1 |
| 114-2 | OIL SEAL (P) | 1 |
| 115-1 | O-RING - GLAND COVER | 1 |
| 115-2 | O-RING - GLAND PLATE | 1 |
| 115-6 | O-RING - BG COVER(M) | 1 |
| 115-7 | O-RING - BG COVER (P) | 1 |
| 120-1 | BOLT - CASING | 1 set |
| 120-2 | BOLT/NUT - GLAND COVER | 1 set |
| 120-3 | BOLT/NUT - GLAND PLATE | 4 |
| 120-4 | BOLT - BG HOUSING | 4 |
| 120-5 | BOLT - BG COVER | 4 |
| 120-6 | BOLT - STAY | 2 |
| 120-9 | BOLT - STOPPER - BG (M) | 1 set |
| 120-10 | BOLT - for DISASSEMBLY | 4 |
| 129 | BEARING NUT | 1 |
| 136 | BEARING WASHER | 1 |
| 193-1 | PLUG - CASING | 1 |
| 193-2 | PLUG - OIL DRAIN (*1) | 1 |
| 193-3 | PLUG - OILER | 1 |
| 255 | OIL LEVEL GAUGE | 1 |
| 256 | CONSTANT LEVEL OILER (*2) | 1 set |
| 285 | AIR BREATHER | 1 |

(*1) MAGNETIC TYPE
(*2) OPTIONAL



EBARA reserves the right to make changes without prior notice.

## CONSTRUCTION - Sectional view



### Standard feature
### Gland packing type with oil lubrication bearings

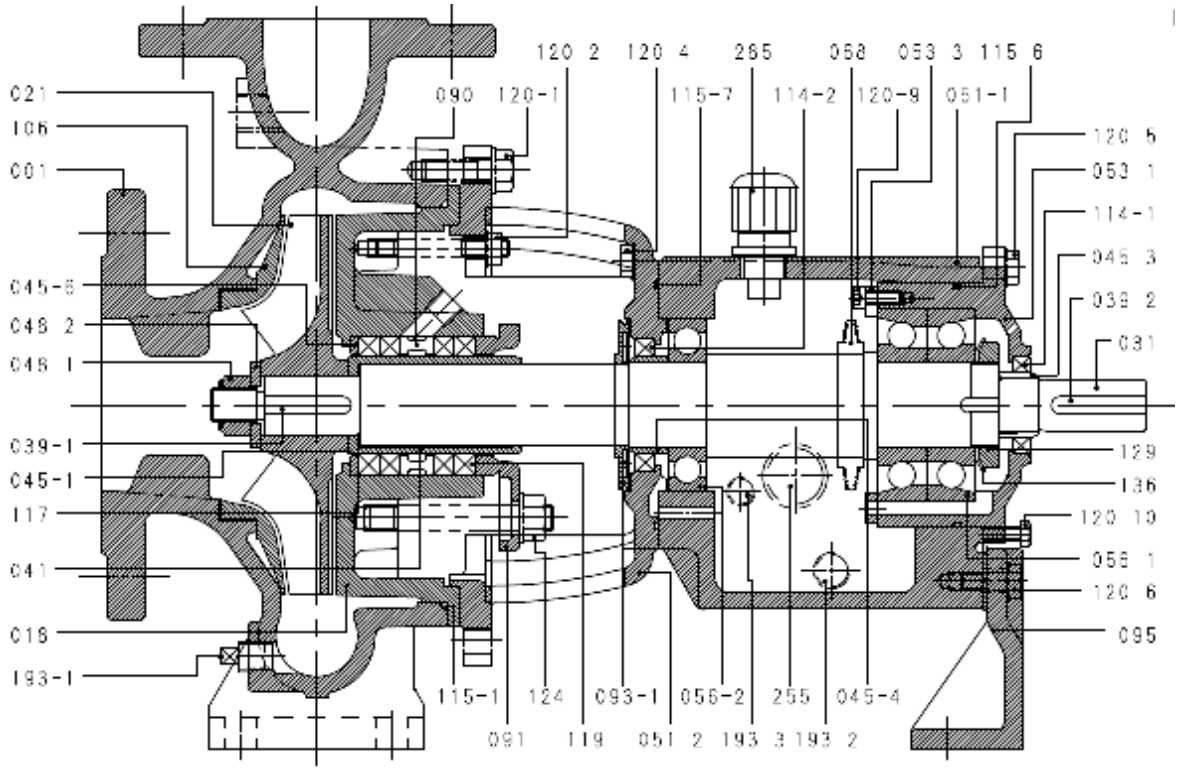


| NO. | NAME OF PART | Q'ty |
|---|---|---|
| 001 | CASING | 1 |
| 018 | GLAND COVER | 1 |
| 021 | IMPELLER | 1 |
| 031 | SHAFT | 1 |
| 039-1 | KEY - IMPELLER | 1 |
| 039-2 | KEY - COUPLING | 1 |
| 041 | PACKING SLEEVE | 1 |
| 045-1 | IMPELLER SHIM | 1 set |
| 045-3 | OIL SEAL SLEEVE (M) | 1 |
| 045-4 | OIL SEAL SLEEVE (P) | 1 |
| 045-6 | SPACER - GPK | 1 |
| 048-1 | IMPELLER NUT | 1 |
| 048-2 | IMPELLER WASHER | 1 |
| 051-1 | BEARING HOUSING | 1 |
| 051-2 | ADAPTER - BG HOUSING | 1 |
| 053-1 | BEARING COVER (M) | 1 |
| 053-3 | STOPPER - BG (M) | 1 |
| 056-1 | BALL BEARING (M) | 1 set |
| 056-2 | BALL BEARING (P) | 1 |
| 068 | OIL FLINGER | 1 |
| 90 | LANTERN RING | 1 |
| 091 | GLAND | 1 |
| 093-1 | DEFLECTOR | 1 |
| 095 | STAY | 1 |
| 106 | SIDE PLATE | 1 |

| NO. | NAME OF PART | Q'ty |
|---|---|---|
| 114-1 | OIL SEAL (M) | 1 |
| 114-2 | OIL SEAL (P) | 1 |
| 115-1 | O-RING - GLAND COVER | 1 |
| 115-2 | O-RING - GLAND PLATE | 1 |
| 115-6 | O-RING - BG COVER(M) | 1 |
| 115-7 | O-RING - BG COVER (P) | 1 |
| 117 | GASKET - PK SLEEVE | 1 |
| 119 | GLAND PACKING | 1 set |
| 120-1 | BOLT - CASING | 1 set |
| 120-2 | BOLT/NUT - GLAND COVER | 1 set |
| 120-4 | BOLT - BG HOUSING | 4 |
| 120-5 | BOLT - BG COVER | 4 |
| 120-6 | BOLT - STAY | 2 |
| 120-9 | BOLT - STOPPER - BG (M) | 1 set |
| 120-10 | BOLT - for DISASSEMBLY | 4 |
| 124 | GLAND BOLT | 2 |
| 129 | BEARING NUT | 1 |
| 136 | BEARING WASHER | 1 |
| 193-1 | PLUG - CASING | 1 |
| 193-2 | PLUG - OIL DRAIN (*1) | 1 |
| 193-3 | PLUG - OILER | 1 |
| 255 | OIL LEVEL GAUGE | 1 |
| 256 | CONSTANT LEVEL OILER (*2) | 1 set |
| 285 | AIR BREATHER | 1 |
| | | |

(*1) MAGNETIC TYPE
(*2) OPTIONAL



EBARA reserves the right to make changes without prior notice.

## CONSTRUCTION - Sectional view



### Optional Mechanical Seal

### 1. Standard Type - Quench

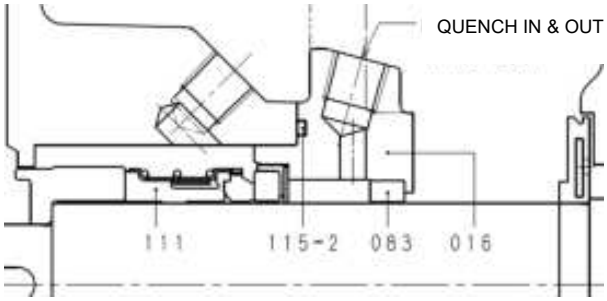


| NO. | NAME OF PART | Q'ty |
|---|---|---|
| 016 | SEAL GLAND PLATE | 1 |
| 083 | THROTTLE BUSHING (*1) | 1 |
| 111 | MECHANICAL SEAL | 1 set |
| 115-2 | O-RING - GLAND PLATE | 1 |

(*1) Standard material is CARBON.

### 2. Standard Type - Double Seal

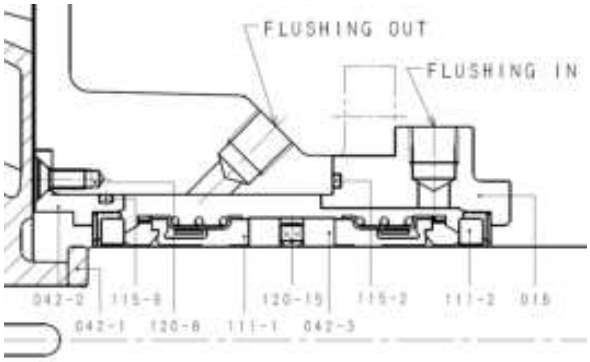


| NO. | NAME OF PART | Q'ty |
|---|---|---|
| 016 | SEAL GLAND PLATE | 1 |
| 042-1 | DISTANCE PIECE | 1 |
| 042-2 | SEAL ADAPTOR | 1 |
| 042-3 | SEAL SET RING | 1 |
| 111-1 | MECHANICAL SEAL | 1 set |
| 111-2 | MECHANICAL SEAL | 1 set |
| 115-2 | O-RING - GLAND PLATE | 1 |
| 115-9 | O-RING - SEAL ADAPTOR | 1 |
| 120-8 | BOLT - SEAL ADAPTOR | 1 set |
| 120-15 | SET SCREW - SEAL SET RING | 2 |

### 3. Cartridge Type - Single Seal

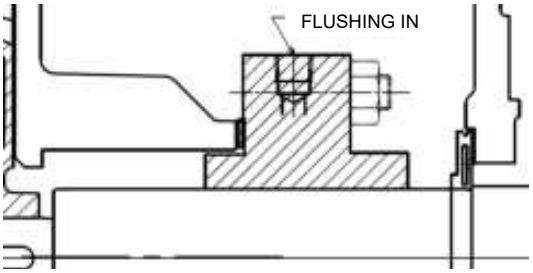


### 4. Cartridge Type - Double Seal

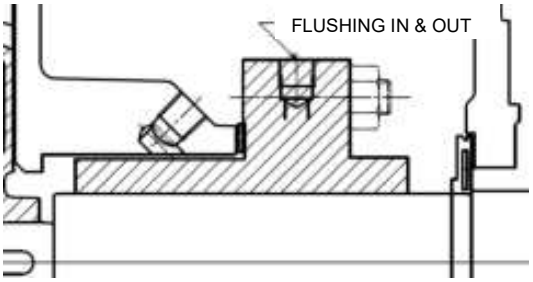




EBARA reserves the right to make changes without prior notice.

### Materials of mechanical seal application with oil lubrication

| No. | Name of part | Material | JIS Material EQ. | ASTM EQ. | Remarks |
|---|---|---|---|---|---|
| 001 | CASING | 304 Stainless steel | SCS13 | A351-CF8 | |
| | | 316 Stainless steel | SCS14A | A351-CF8M | |
| 016 | SEAL GLAND PLATE | 316 Stainless steel | SCS14A | A351-CF8M | |
| 018 | GLAND COVER | 304 Stainless steel | SCS13 | A351-CF8 | |
| | | 316 Stainless steel | SCS14A | A351-CF8M | |
| 021 | IMPELLER | 304 Stainless steel | SCS13 | A351-CF8 | |
| | | 316 Stainless steel | SCS14A | A351-CF8M | |
| 031 | SHAFT | 304 Stainless steel | SUS304 | A276-304 | |
| | | 316L Stainless steel | SUS316L | A276-316L | |
| 039-1 | KEY - IMPELLER | 304 Stainless steel | SUS304 | A276-304 | |
| | | 316 Stainless steel | SUS316 | A276-316 | |
| 039-2 | KEY - COUPLING | Carbon steel | S50C | A576-1050 | |
| 042 | SEAL SPACER | 316L Stainless steel | SUS316L | A276-316L | |
| 045-1 | IMPELLER SHIM | 316L Stainless steel | SUS316L | A276-316L | |
| 045-3 | OIL SEAL SLEEVE (M) | Carbon steel | S50C | A576-1050 | |
| 045-4 | OIL SEAL SLEEVE (P) | Carbon steel | S50C | A576-1050 | |
| 048-1 | IMPELLER NUT | 304 Stainless steel | SUS304 | A276-304 | |
| | | 316 Stainless steel | SUS316 | A276-316 | |
| 048-2 | IMPELLER WASHER | 316L Stainless steel | SUS316L | A276-316L | |
| 051-1 | BEARING HOUSING | Cast iron | FC250 | A48-35 | |
| 051-2 | ADAPTER - BG HOUSING | Cast iron | FC250 | A48-35 | |
| 053-1 | BEARING COVER (M) | Cast iron | FC250 | A48-35 | |
| 053-3 | STOPPER - BG(M) | Carbon steel | SS | A283-D | |
| 056-1 | BALL BEARING (M) | Steel | | | |
| 056-2 | BALL BEARING (P) | Steel | | | |
| 068 | OIL FLINGER | NBR | | | |
| 093-1 | DEFLECTOR | EPDM | | | |
| 095 | STAY | Carbon steel or Ductile cast irons | SPHC or FCD450 | A569 or A536-65-45-12 | |
| 106 | SIDE PLATE | 304 Stainless steel | SCS13 | A351-CF8 | |
| | | 316 Stainless steel | SCS14A | A351-CF8M | |
| 111 | MECHANICAL SEAL | Sic / Carbon / FKM | | | |
| | | Sic / Sic / FKM | | | Optional |
| | | Sic / Carbon / EPDM | | | Optional |
| 114-1 | OIL SEAL (M) | NBR | | | |
| 114-2 | OIL SEAL (P) | NBR | | | |
| 115-1 | O-RING - GLAND COVER | FKM | | | |
| 115-2 | O-RING - GLAND PLATE | FKM | | | |
| 115-6 | O-RING - BG COVER(M) | NBR | | | |
| 115-7 | O-RING - BG COVER (P) | NBR | | | |
| 120-1 | BOLT - CASING | Carbon steel | SS | A283-D | |
| 120-2 | BOLT/NUT - GLAND COVER | Carbon steel | SS | A283-D | |
| 120-3 | BOLT/NUT - GLAND PLATE | Carbon steel | SS | A283-D | |
| 120-4 | BOLT - BG HOUSING | Carbon steel | SS | A283-D | |
| 120-5 | BOLT - BG COVER | Carbon steel | SS | A283-D | |
| 120-6 | BOLT - STAY | Carbon steel | SS | A283-D | |
| 120-9 | BOLT - STOPPER - BG (M) | Carbon steel | SCM435 | - | |
| 120-10 | BOLT - for DISASSEMBLY | Carbon steel | SS | A283-D | |
| 129 | BEARING NUT | Carbon steel | SS | A283-D | |
| 136 | BEARING WASHER | Carbon steel | SS | A283-D | |
| 193-1 | PLUG - CASING | 316 Stainless steel | SUS316 | A276-316 | |
| 193-2 | PLUG - OIL DRAIN | Stainless steel / Magnet | | | Magnetic type |
| 193-3 | PLUG - OILER | Carbon steel | | | |
| 255 | OIL LEVEL GAUGE | Poly carbonate / NBR | | | |
| 256 | CONSTANT LEVEL OILER | Zinc die-cast and glass | | | Optional |
| 285 | AIR BREATHER | Poly carbonate / NBR | | | |



EBARA reserves the right to make changes without prior notice.

## Materials of gland packing application with oil lubrication (*1)

| No. | Name of part | Material | JIS Material EQ. | ASTM EQ. | Remarks |
|---|---|---|---|---|---|
| 018 | GLAND COVER | 304 Stainless steel | SCS13 | A351-CF8 | |
| | | 316 Stainless steel | SCS14A | A351-CF8M | |
| 041 | PACKING SLEEVE | 304 Stainless steel | SUS304 | A276-304 | |
| | | 316L Stainless steel | SUS316L | A276-316L | |
| 045-6 | SPACER - GPK | 316L Stainless steel | SUS316L | A276-316L | |
| 90 | LANTERN RING | 316L Stainless steel | SUS316L | A276-316L | |
| 091 | GLAND | 316 Stainless steel | SCS14 | A351-CF8M | |
| 117 | GASKET - PK SLEEVE | Graphite w/s.steel sheet | | | |
| 119 | GLAND PACKING | Carbonized fiber packing (P#6501L eq.) | | | see D-6 |
| 124 | GLAND BOLT | 316 Stainless steel | SUS316 | A276-316 | |

(*1) The components which constitute the gland packing pump are these parts instead of P/N 016, 018, 042, 111, 115-2 and 120-3 of the mechanical seal pump.


EBARA reserves the right to make changes without prior notice.

# CONSTRUCTION – Selection of Shaft Seal



## 1. Mechanical seal lineup （＊1）

Basic style: Unbalanced type, Internal arrangement,
Gland cover non-water-cooled structure

| Mechanical seal type （＊3） | | without seal sleeve | with seal sleeve |
|---|---|---|---|
| Single （＊2） | EB | Standard | --- |
| | CS | Optional | Optional |
| Single cartridge （＊2） | CS | --- | Optional |
| Double (back to back) | EB | Semi-standard | --- |
| | CS | --- | Optional |
| Double knife-edge | MB | --- | Optional |
| Double cartridge | CS | --- | Optional |

（＊1）For other lineups, please contact the engineering center.

（＊2）With QUENCH is applied as a semi-standard.

（＊3）EB：Mono coil / rubber bellows

CS：Coil spring / O ring

MB：Metal bellows

## 2. Material of mechanical seal（＊4）

（1）Face materials

Standard：Sic / Carbon

Semi-standard：Sic / Sic

（2）Rubber parts material

Standard：FKM

Semi-standard：EPDM

Optional：FFKM

（＊4）Please consult with the engineering center for other materials.

## 3. Soft packing

（1）Materials

Standard：Carbonized fiber packing（P#6501L EQ.)

Optional：PTFE (P#436 EQ.) or P#4526L EQ or P#4527L EQ

（2）Arrangement

2 soft packing + lantern ring + 2 soft packing

（3）Other

・Depending on suction pressure and box pressure, it may not be possible to adopt a soft packing structure.

・It can not be used for metallic soft packing.

・It can not be used for the soft packing structure for the slurry containing liquid or the liquid where crystals are deposited.

・It does not correspond to the QUENCH structure.

・It does not correspond to the split type gland structure.



EBARA reserves the right to make changes without prior notice.

## SELECTION CHART



50Hz – 2950min$^{-1}$

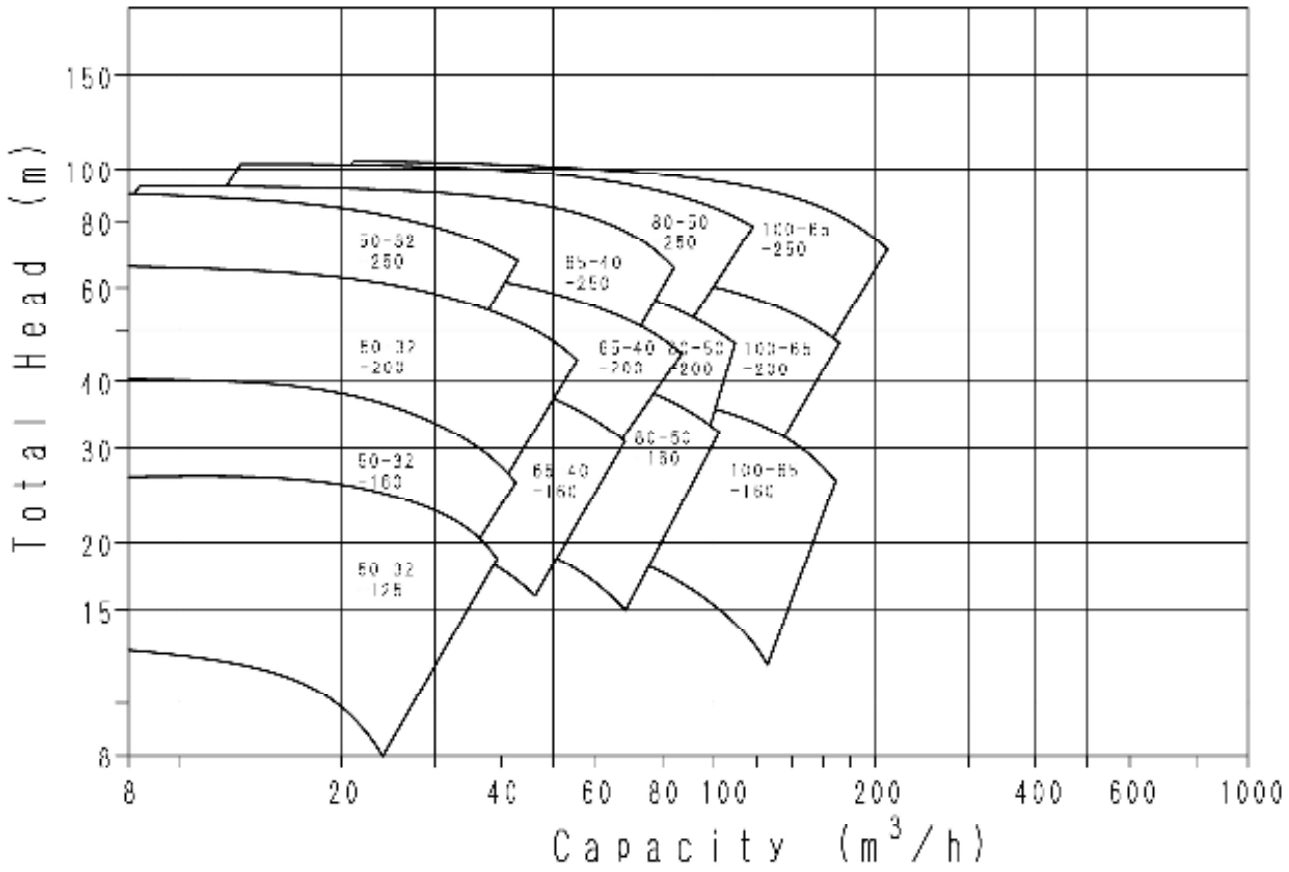


Note : When selecting a pump , NPSH Av. should have a safety margin of at least 0.5m from NPSH Re.



EBARA reserves the right to make changes without prior notice.

## SELECTION CHART



50Hz – 1450min$^{-1}$

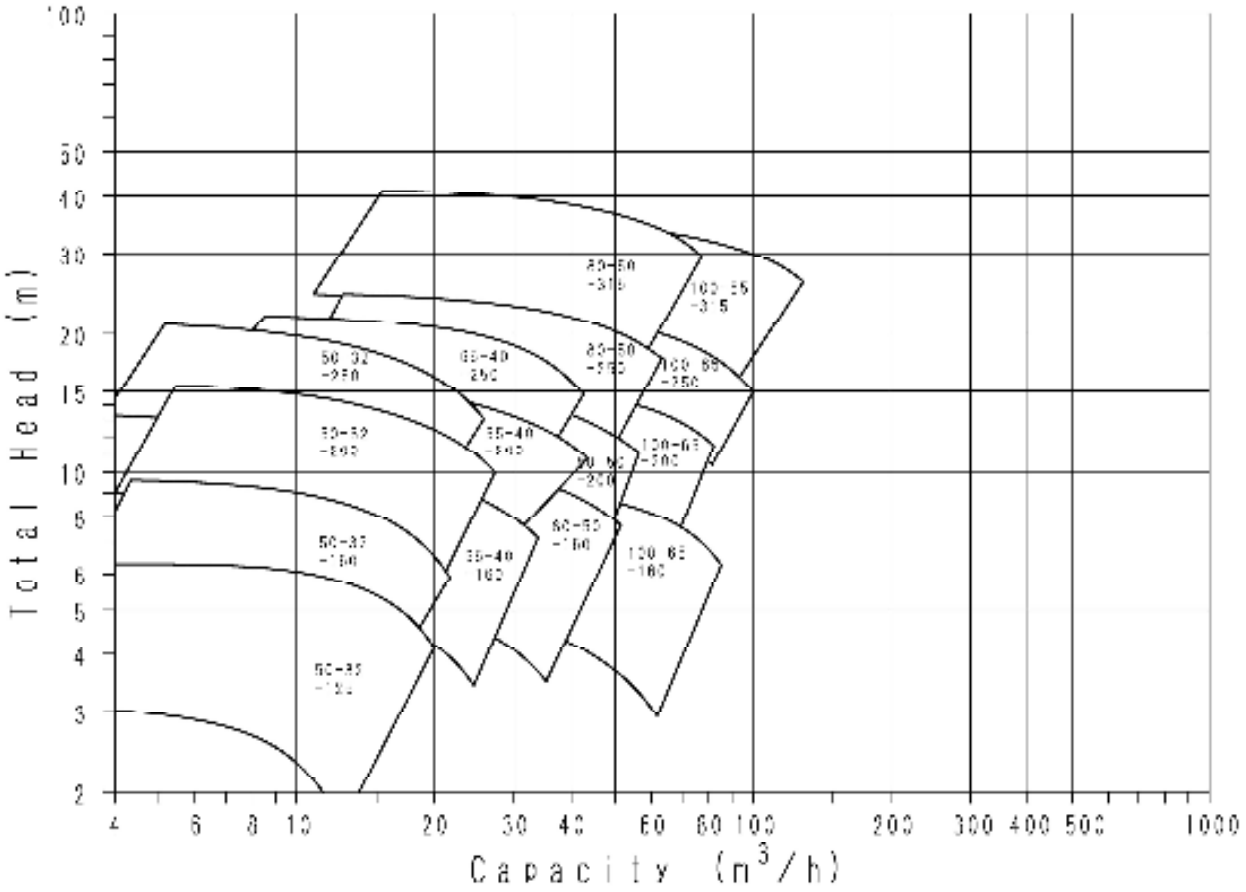


Note : When selecting a pump , NPSH Av. should have a safety margin of at least 0.5m from NPSH Re.



EBARA reserves the right to make changes without prior notice.

## SELECTION CHART



60Hz – 3550min$^{-1}$

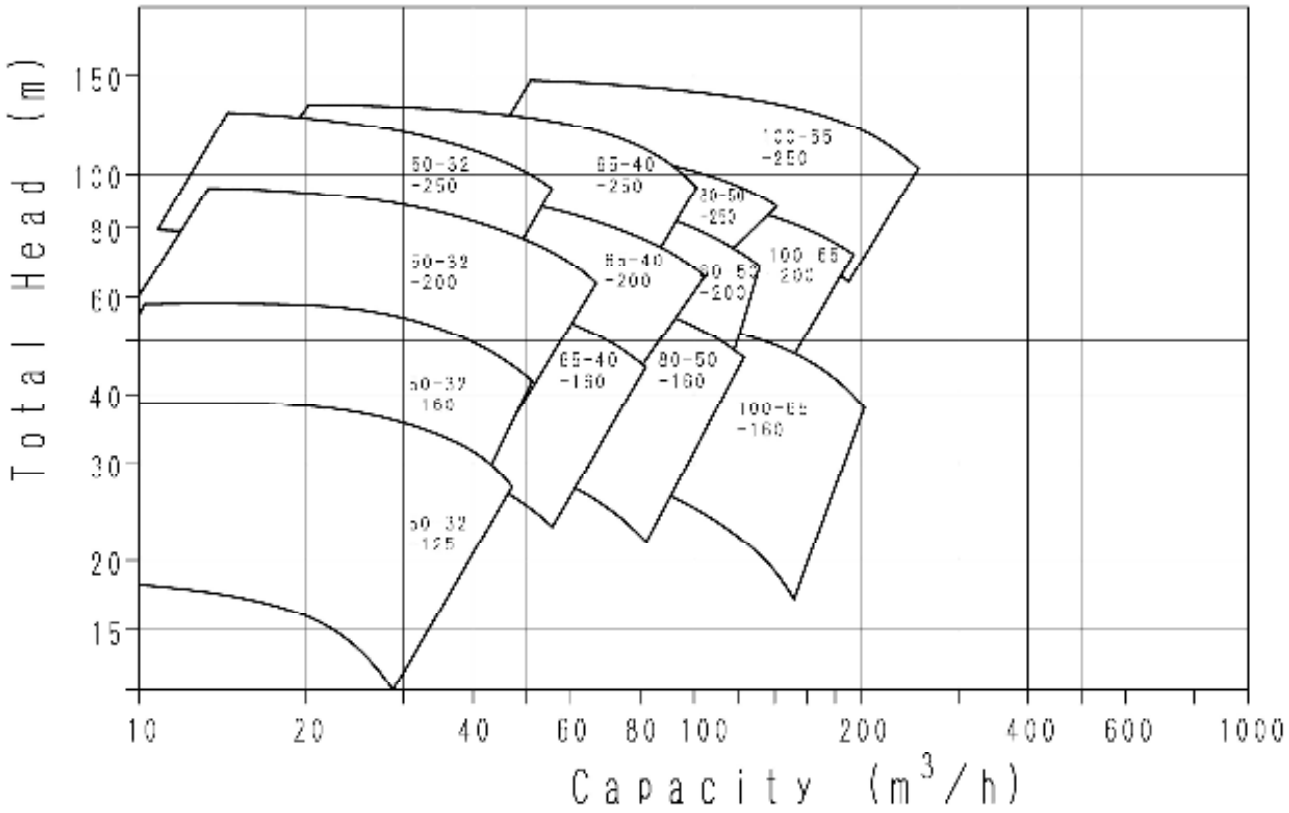


Note : When selecting a pump , NPSH Av. should have a safety margin of at least 0.5m from NPSH Re.



EBARA reserves the right to make changes without prior notice.

## SELECTION CHART



60Hz – 1750min$^{-1}$

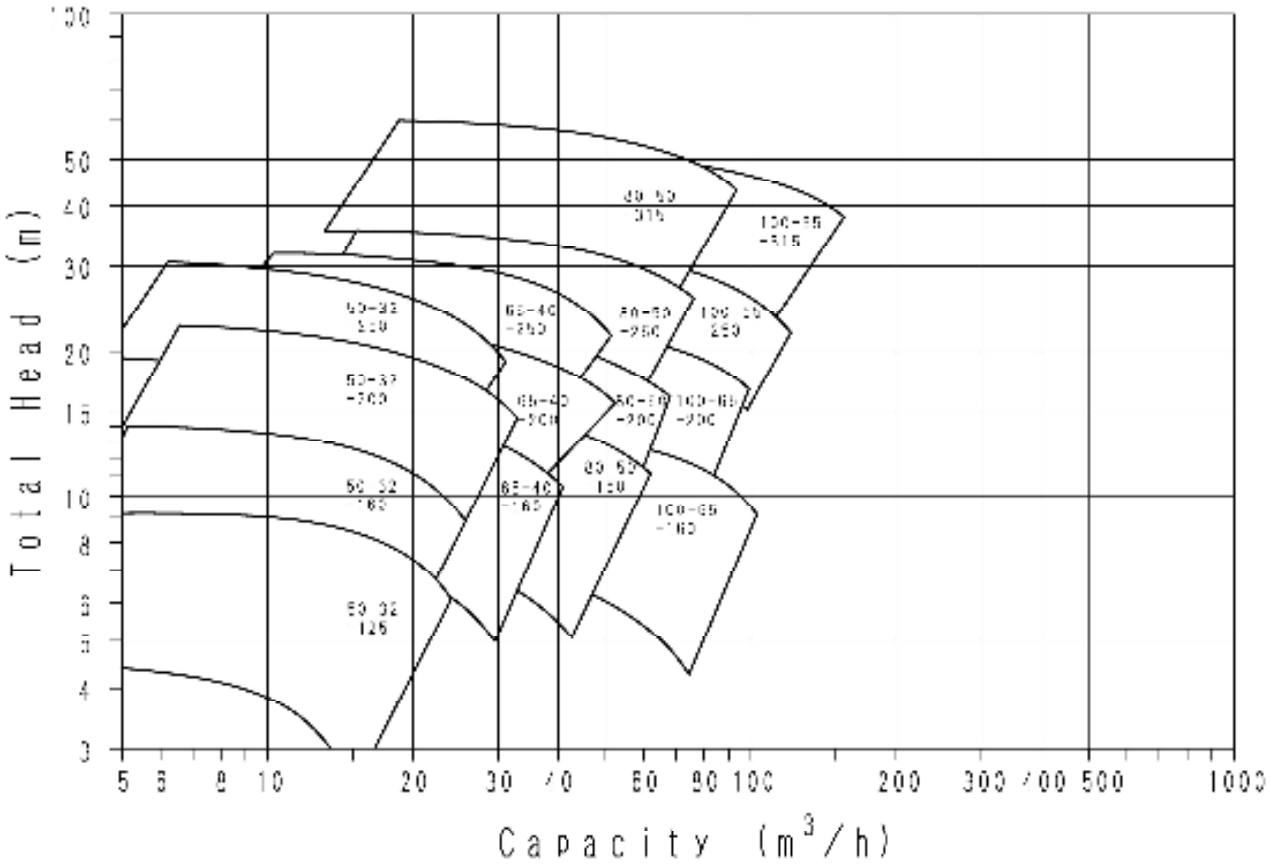


Note : When selecting a pump , NPSH Av. should have a safety margin of at least 0.5m from NPSH Re.



EBARA reserves the right to make changes without prior notice.